Flush Silhouette Switches

LB/LBW Series

ø16mm

LB Series

Projects only 2mm from the panel surface. For sleek and refined style.

• See website for details on approvals and standards.

Thinnest in the industry

[Shape]

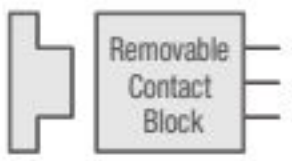

[Contact Rating]

[Action]

[Operating Stroke]

	Series	page
	Flush Silhouette Switches LB Series	B-073
	Flush Silhouette Switches LBW Series	B-091
	ø16mm LB Series	B-103
	UP Series	B-123

For more information, visit http://eu.idec.com

Stylish and Functional

IDEC's extensive range of LB/LBW series switches can be used for a wide range of applications.

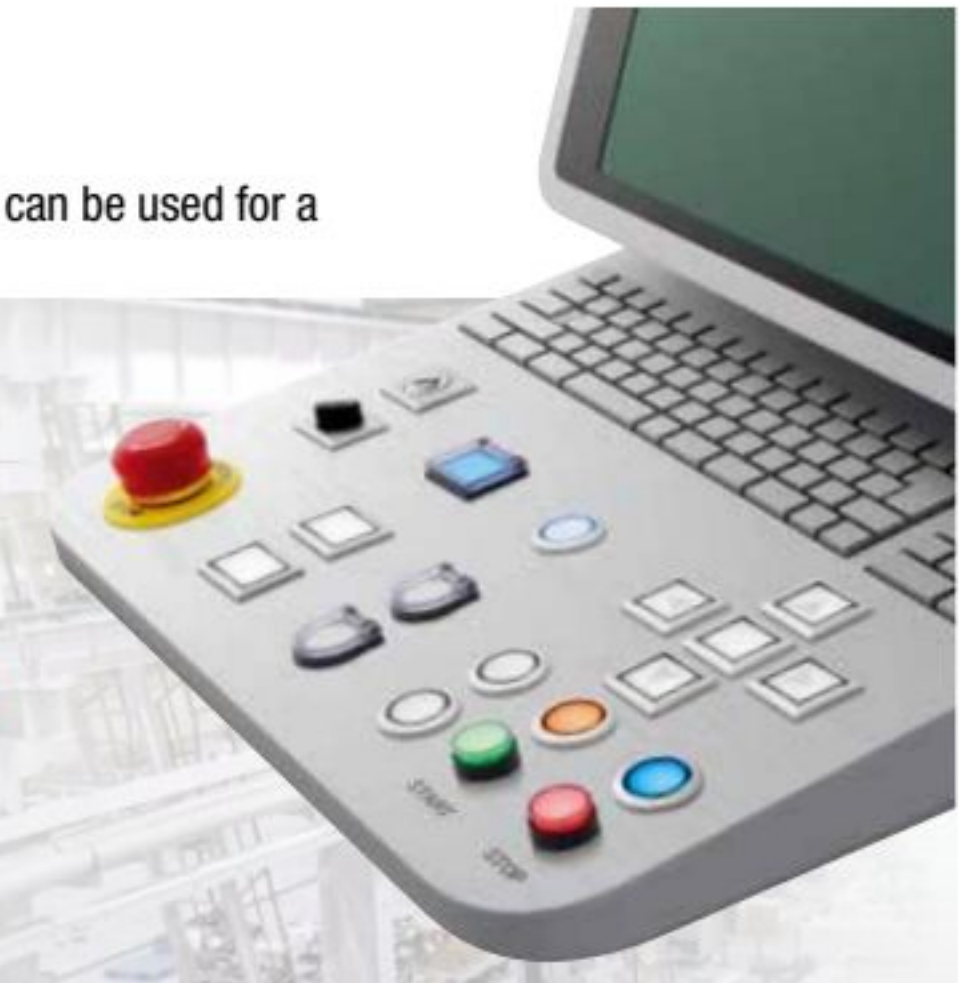

Flush Silhouette

Flush Silhouette

Projects only 2mm from the panel surface. For sleek and refined style.

LB Series Flush Silhouette Switches
Slim 2mm-thick bezels for stylish panels.

LBW Series Flush Silhouette Switches
Smart appearance with large surface for secure operation.

LB Series Bezel ø22/□22mm

LBW Series Bezel ø26/□26mm

Control Unit

ø16mm LB Series
Miniature Switches and Pilot Lights
Short body for space-saving installation.

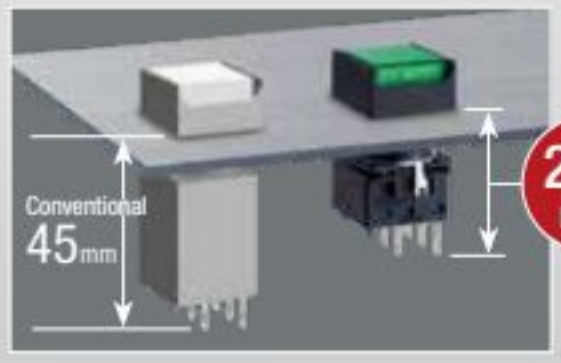

27.9 mm

Short Body
Depth of only 27.9mm behind panel. Reduces the size of machines and control panels.

Compact

Flush Silhouette & Control Unit

Removable Contact Block /Single Board Mounting
Removable contacts enable easy wiring / Single board mounting for space-saving installation.

Separate & One Board

UP series has the same depth as LB/LBW series.
Mounts on the same panel.
(Flush bezel: 34.9mm, standard bezel: 27.9mm)

Waterproof
Degree of protection: IP65

Waterproof

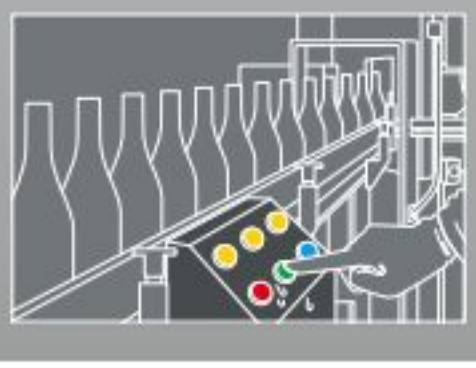

APEM
Switches & Pilot Lights
Control Boxes
Emergency Stop Switches
Enabling Switches
Safety Products
Explosion Proof
Terminal Blocks
Relays & Sockets
Circuit Protectors
Power Supplies
LED Illumination
Controllers
Operator Interfaces
Sensors
AUTO-ID

Flush Silhouette
ø16
ø22
ø30
Miniature
Pilot Lights

CW
LW-F
LB
LBW
UP
Flush Bezel

Flush Silhouette Switches

Actual Size

Slim
Thinnest in the industry (as of February 2011)

Protection degree: IP65 (IEC 60529)

point For sleek and refined style

* Panel cutout (mm)

Round ø18.2*

Square □18.2*

Rectangular 18.2 × 24.2*

Illuminated Pushbuttons

Illuminated pushbuttons with switch guard available

Pushbuttons

Marking plates can be used with lens style pushbuttons

*Does not light on.

Pushbuttons with switch guard available

Pilot Lights

Dome Pilot Lights

Selector Switches

2-position and 3-position selector switches. Maintained and other various spring return actions available.

*Photo: lever operator (knob operator also available)

Illuminated selector switches available

Key Selectors ensure safety

Wave Key

Seven different keys to choose from. Key removable in desired positions.

Buzzer

Protection degree: IP54
Steady sound at 80 dB minimum (at 0.1m)

Lever Switches

Degree of protection: IP67
Up/down operation.
2- and 3-positions available.
For 3-position switches, maintained and return two-way actions available.

Black bezel only

APEM
Switches & Pilot Lights
Control Boxes
Emergency Stop Switches
Enabling Switches
Safety Products
Explosion Proof
Terminal Blocks
Relays & Sockets
Circuit Protectors
Power Supplies
LED Illumination
Controllers
Operator Interfaces
Sensors
AUTO-ID
Flush Silhouette
ø16
ø22
ø30
Miniature
Pilot Lights
CW
LW-F
LB
LBW
UP
Flush Bezel

Flush Silhouette Switches LB Series

Flush bezel projects only 2 mm from front of panel.

Contact Ratings (See B-120 for approval ratings)

Gold Contact (switch base: blue)

Rated Insulation Voltage		250V	
Rated Thermal Current		3A	
Rated Operating Voltage		30V DC	125V AC
Rated Operating Current (electrical life: 100,000 operations)	Resistive Load	0.1A	0.1A
Contact Material		Gold plated silver	

- Minimum applicable load (reference value): 5V AC/DC, 1 mA
  Applicable range is subject to the operating conditions and load.
- See electrical life in Specifications.

Silver Contact (switch base: gray)

Rated Insulation Voltage				250V		
Rated Operating Voltage				30V	125V	250V
Rated Operating Current	Electrical Life 50,000 operations	AC 50/60Hz	Resistive load	—	5A	5A
			Inductive load	—	3A	1.5A
		DC	Resistive load	5A	1.1A	—
			Inductive load	2A	0.4A	—
	Electrical Life 100,000 operations	AC 50/60Hz	Resistive load	—	5A	3A
			Inductive load	—	3A	1.5A
		DC	Resistive load	3A	0.6A	—
			Inductive load	1A	0.22A	—
Rated Thermal Current				5A		
Contact Material				Silver		

- AC inductive load: PF=0.6 to 0.7 DC inductive load: L/R=7 ms max.

LED Ratings

Rated Voltage	5V DC	12V AC/DC	24V AC/DC
Voltage Range	5V DC±5%	12V AC/DC ±10%	24V AC/DC ±10%
LED Part No.	LB9Z-LED5②	LB9Z-LED1②	LB9Z-LED2②
Current Draw	5 mA (typ.)		
Voltage Marking	Marked on the side of the LED unit		
LED Life (reference value)	Approx. 30,000 hours [until the brightness reduces to 50% of the initial value when lit at the rated voltage (direct current) under 25°C environment.]		
Internal Circuit	A, G, R, PW, S		

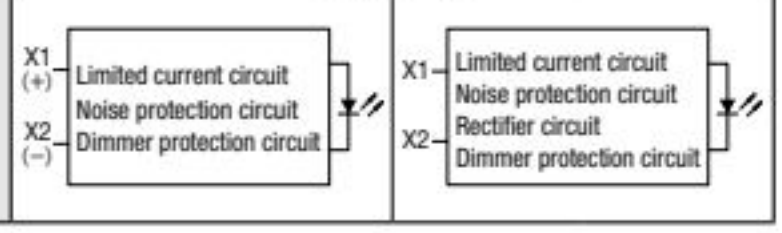

- ② (color code): A (amber), G (green), PW (pure white), R (red), S (blue)
- Use the pure white (PW) module for yellow illumination.
- LED lamp contains a current-limiting resistor.

Specifications

Operating Temperature		–25 to +60°C (no freezing) Illuminated units: –25 to +55°C
Storage Temperature		–30 to +80°C (no freezing)
Operating Humidity		45 to 85% RH (no condensation)
Contact Resistance		50 mΩ maximum (initial value)
Insulation Resistance		100 MΩ minimum (500V DC megger)
Dielectric Strength	Switch Unit	Between live part and ground: 2,000V AC, 1 minute Between terminals of different poles: 2,000V AC, 1 minute Between terminals of the same poles: 1,000V AC, 1 minute
	Illumination Unit	Between live part and ground: 2,000V AC, 1 minute
Vibration Resistance		Operating extremes/Damage limits: 5 to 55 Hz, amplitude 0.5 mm
Shock Resistance		Operating extremes: 100 m/s² Damage limits: 1,000 m/s²
Mechanical Life (minimum operations)		Momentary: 2,000,000 Maintained: 250,000 Selector switches: 250,000 Key selector switches: 250,000
Electrical Life (minimum operations)		Momentary: 50,000 / 100,000 (*1) Maintained: 50,000 / 100,000 (*2) Selector switches: 50,000 / 100,000 (*2) Key selector switches: 50,000 / 100,000 (*2)
Degree of Protection		IP65 (IEC 60529)
Terminal Style		Solder/tab terminal #110 PC board terminal
Weight (approx.)		14g (LB8L-M1T24) 13g (LB8P-1T04) 13g (LB8B-M1T2) 15g (LB8S-2T2) 27g (LB8K-2ST2A) 15g (LB8GL-M1T24) 14g (LB8GB-M1T2)

*1: Switching frequency 1,800 operations/h.
*2: Switching frequency 1,200 operations/h.

APEM
Switches & Pilot Lights
Control Boxes
Emergency Stop Switches
Enabling Switches
Safety Products
Explosion Proof
Terminal Blocks
Relays & Sockets
Circuit Protectors
Power Supplies
LED Illumination
Controllers
Operator Interfaces
Sensors
AUTO-ID
Flush Silhouette
ø16
ø22
ø30
Miniature
Pilot Lights
CW
LW-F
LB
LBW
UP
Flush Bezel

Download catalogs and CAD from http://eu.idec.com/downloads

Flush Silhouette Switches LB Series

Illuminated Pushbuttons

Solder/Tab Terminal

Package Quantity:1

Part No. / Shape: LB①L-②1T③④⑤＊

Round / Black Bezel

Square / Black Bezel

Rectangular / Black Bezel

Round / Metallic Bezel

Square / Metallic Bezel

Rectangular / Metallic Bezel

Round with Guard

Square with Guard

Rectangular with Guard

① Shape	② Operation	③ Contact	④ LED Operating Voltage	Part No.	＊ Illumination Color Code
Black bezel	Momentary	Gold/SPDT	24V AC/DC	LB①L-M1T14＊	Specify the color code in place of ＊ in the Part No. A: amber G: green PW: pure white R: red S: blue Y: yellow
		Gold/DPDT		LB①L-M1T24＊	
	Maintained	Gold/SPDT	24V AC/DC	LB①L-A1T14＊	
		Gold/DPDT		LB①L-A1T24＊	
Metallic bezel	Momentary	Gold/SPDT	24V AC/DC	LB①L-M1T14＊	
		Gold/DPDT		LB①L-M1T24＊	
	Maintained	Gold/SPDT	24V AC/DC	LB①L-A1T14＊	
		Gold/DPDT		LB①L-A1T24＊	
Guard Type	Momentary	Gold/SPDT	24V AC/DC	LB①L-M1T14＊	
		Gold/DPDT		LB①L-M1T24＊	
	Maintained	Gold/SPDT	24V AC/DC	LB①L-A1T14＊	
		Gold/DPDT		LB①L-A1T24＊	

- Illuminated pushbuttons contain an LED unit. For details on LED units, see B-130.
- The guard opens 180 degrees spring-return.
- Illuminated pushbuttons can be used with legend markings. Engraving can be done on a marking plate which is placed in the lens, or a clear film can be printed and placed in the lens. See B-133 for details on the marking plate and film.
- PC board terminals available for gold contacts. Silver contacts also available. To specify, see Part Number Development below.
- 5V DC and 12V AC/DC LED operating voltages also available.
- Other bezel sizes available (LBW series). For details, see B-093.

Part Number Development

LB①L-②1T③④⑤＊

① Shape

Code	Shape
6	Round / Black Bezel
7	Square / Black Bezel
8	Rectangular / Black Bezel
6M	Round / Metallic Bezel
7M	Square / Metallic Bezel
8M	Rectangular / Metallic Bezel
6G	Round with Guard
7G	Square with Guard
8G	Rectangular with Guard

② Operation

Code	Operation
A	Maintained
M	Momentary

③ Contacts

Code	Contact
1	Gold/SPDT
2	Gold/DPDT
5	Silver/SPDT
6	Silver/DPDT

④ LED Operating Voltage

Code	Rated Operating Voltage
1	5V DC
3	12V AC/DC
4	24V AC/DC

⑤ Others

Code	Specification	Part No. Example
Blank	Solder/Tab Terminal	—
V	PC Board Terminal (Gold Contact Only)	LB6L-M1T14V＊

- Specify the color code in place of ＊ in the table above.

For more information, visit http://eu.idec.com

Dimensions

All dimensions in mm.

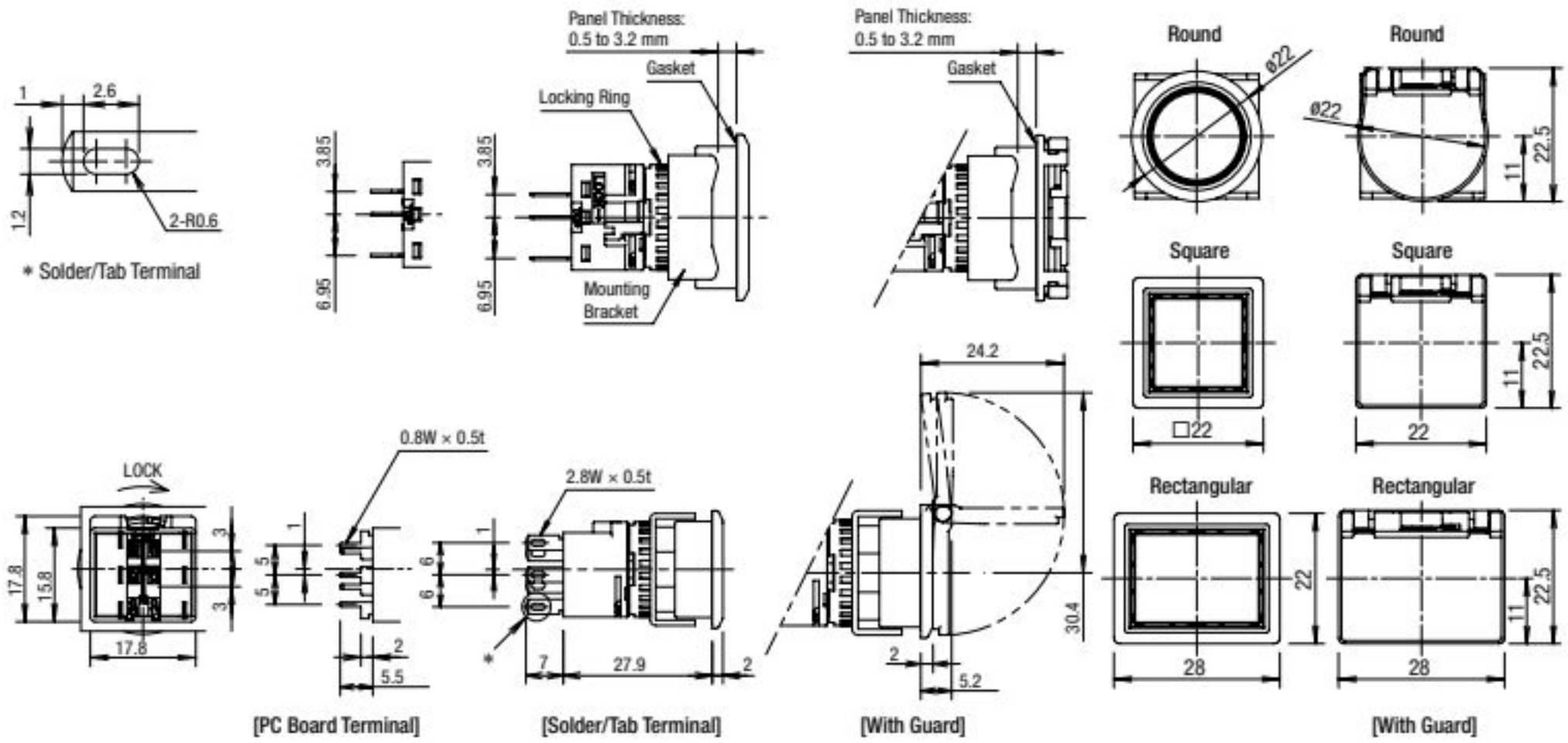

Terminal Arrangement (Bottom View)

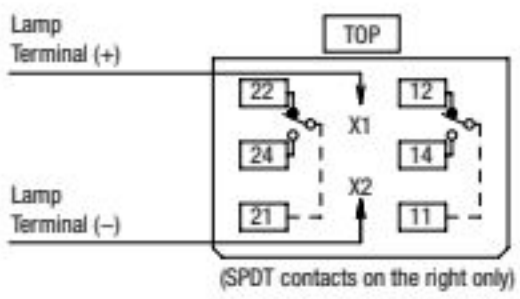

Panel Cut-out for Positioning

Round (LB6L/LB6ML/LB6GL)

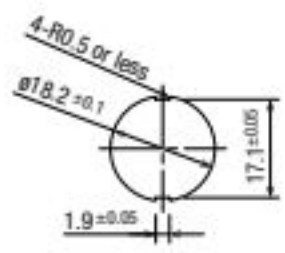

Mounting Hole Layout

Round (LB6L/LB6ML/LG6GL)

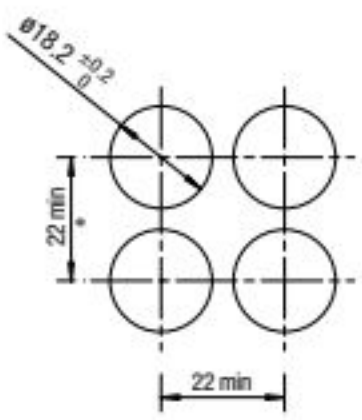

Square (LB7/LB7ML/LB7GL)

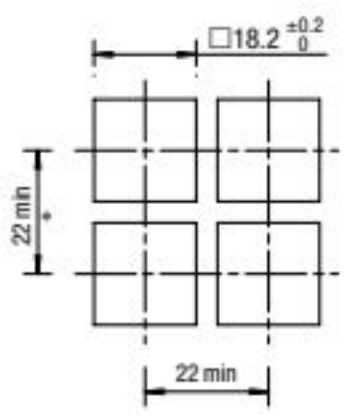

Square (LB8L/LB8ML/LB8GL)

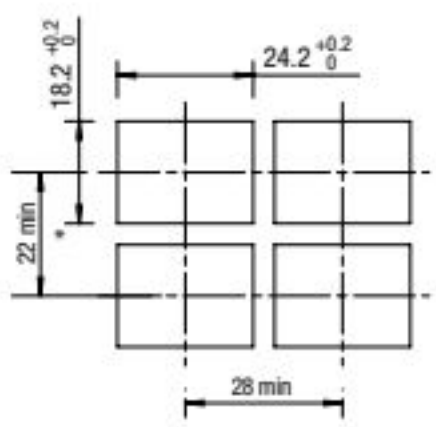

* 45 mm minimum for switches with guard

Note: When using rubber boot or terminal cover, see dimensions on B-127 and B-128.

- For details on pc board and circuit design, see B-121.
- For details on single board mounting, see B-122.

Download catalogs and CAD from http://eu.idec.com/downloads

Flush Silhouette Switches LB Series

Pilot Lights

Solder/Tab Terminal

Package Quantity:1

Part No. / Shape	LB①P-②T0③④＊

② Lens Shape	① Shape	③ LED Operating Voltage	Part No.	＊ Illumination Color Code
Flush	Black Bezel	24V AC/DC	LB①P-1T04＊	Specify the color code in place of ＊ in the Part No. A: amber G: green PW: pure white R: red S: blue Y: yellow
	Metallic Bezel	24V AC/DC	LB①P-1T04＊	
Dome	Black Bezel	24V AC/DC	LB6P-2T04＊	
	Metallic Bezel	24V AC/DC	LB6MP-2T04＊	

- Pilot lights contain an LED unit. For maintenance LED units see B-130.
- Legends and symbols can be engraved on a marking plate or film to be inserted under the lens by users for labelling purposes. See B-133 for details.
- PC board terminals available. To specify, see Part Number Development below.
- 5V DC and 12V AC/DC LED operating voltages also available.
- Other bezel sizes available (LBW series). For details, see B-095.

Part Number Development

LB①P-②T0③④＊

① Shape

Code	Shape
6	Round / Black Bezel
7	Square / Black Bezel
8	Rectangular / Black Bezel
6M	Round / Metallic Bezel
7M	Square / Metallic Bezel
8M	Rectangular / Metallic Bezel

- Round only for dome.

② Lens Shape

Code	Lens Shape
1	Flush
2	Dome

③ LED Operating Voltage

Code	Rated Operating Voltage
1	5V DC
3	12V AC/DC
4	24V AC/DC

④ Others

Code	Specification	Part No. Example
Blank	Solder/Tab Terminal	—
V	PC Board Terminal	LB6P-1T04V＊

- Specify the color code in place of ＊ in the table above.

For more information, visit http://eu.idec.com

Dimensions

All dimensions in mm.

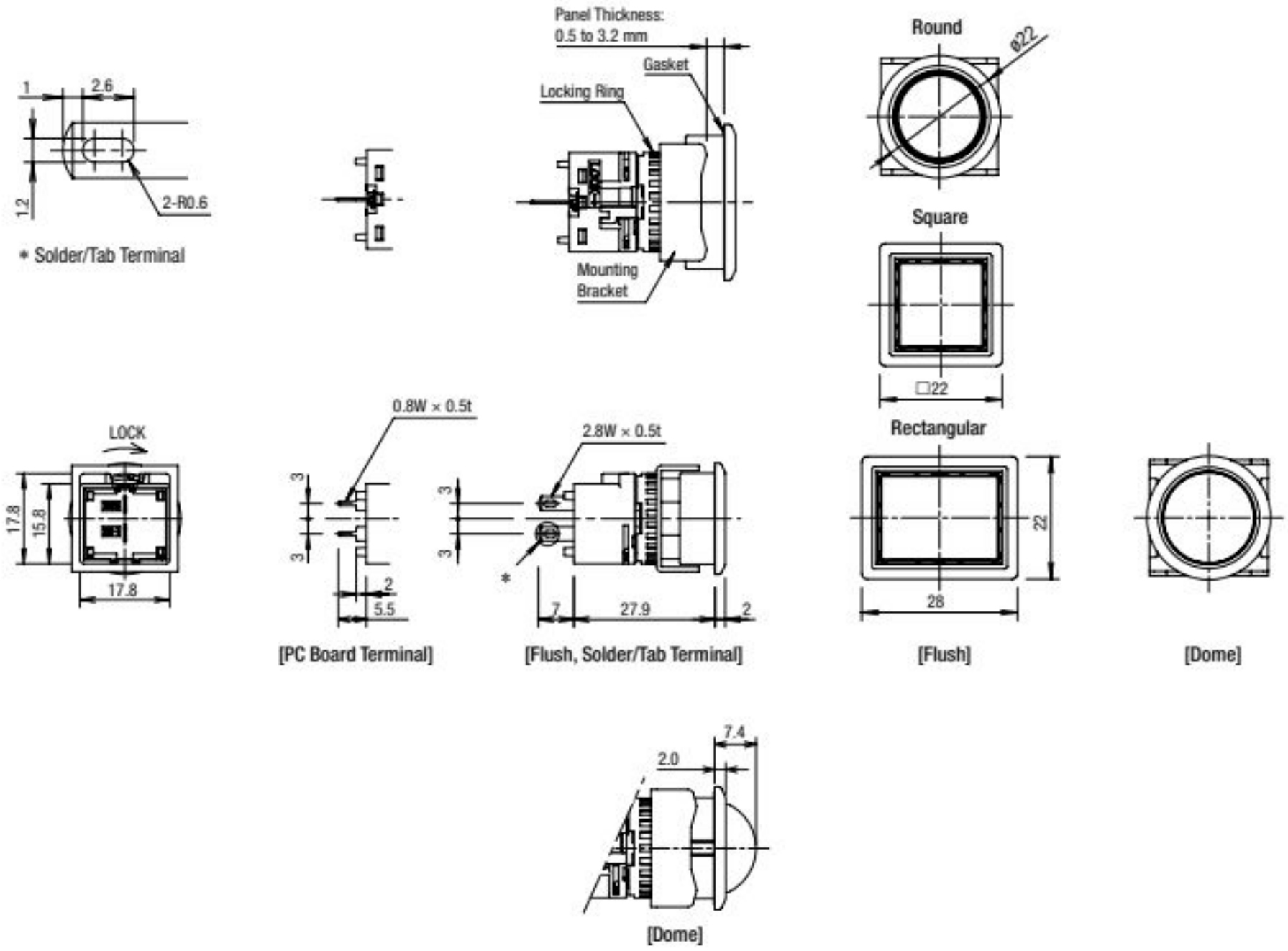

Terminal Arrangement (Bottom View)

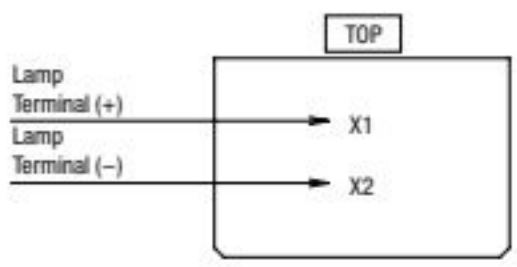

Panel Cut-out for Positioning

Round (LB6P/LB6MP)

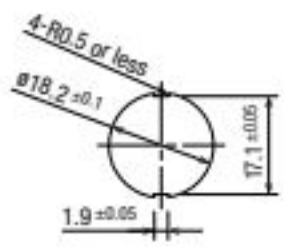

Mounting Hole Layout

Round (LB6P/LB6MP)

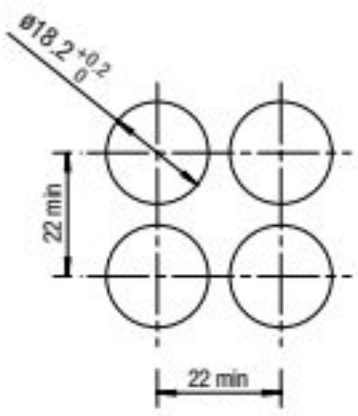

Square (LB7P/LB7MP)

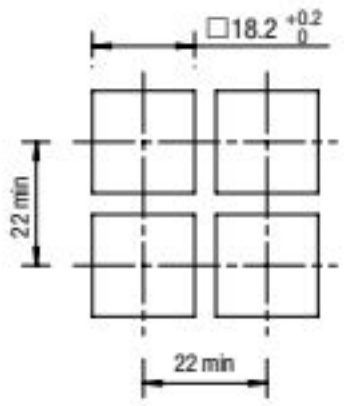

Square (LB8P/LB8MP)

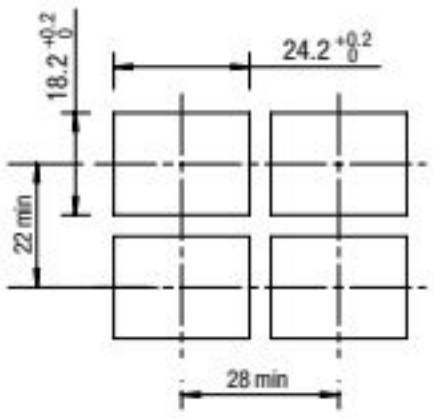

Note: When using rubber boot or terminal cover, see dimensions on B-127 and B-128.

- For details on pc board and circuit design, see B-121.
- For details on single board mounting, see B-122.

Download catalogs and CAD from http://eu.idec.com/downloads

Flush Silhouette Switches LB Series

Pushbuttons

Solder/Tab Terminal

Package Quantity:1

Part No. / Shape: LB①B-②1T③④*

Round / Black Bezel

Square / Black Bezel

Rectangular / Black Bezel

Round / Metallic Bezel

Square / Metallic Bezel

Rectangular / Metallic Bezel

Round with Guard

Square with Guard

Rectangular with Guard

① Shape	Button Style	② Operation	③ Contact	Part No. Gold Contact	Part No. Silver Contact	* Color Code
Black bezel	Button	Momentary	SPDT	LB①B-M1T1*	LB①B-M1T5*	B: black G: green R: red S: blue W: white Y: yellow
			DPDT	LB①B-M1T2*	LB①B-M1T6*	
			3PDT	LB①B-M1T3*	LB①B-M1T7*	
		Maintained	SPDT	LB①B-A1T1*	LB①B-A1T5*	
			DPDT	LB①B-A1T2*	LB①B-A1T6*	
			3PDT	LB①B-A1T3*	LB①B-A1T7*	
	Lens	Momentary	SPDT	LB①B-M1T1L*	LB①B-M1T5L*	A: amber G: green R: red S: blue W: white Y: yellow
			DPDT	LB①B-M1T2L*	LB①B-M1T6L*	
			3PDT	LB①B-M1T3L*	LB①B-M1T7L*	
		Maintained	SPDT	LB①B-A1T1L*	LB①B-A1T5L*	
			DPDT	LB①B-A1T2L*	LB①B-A1T6L*	
			3PDT	LB①B-A1T3L*	LB①B-A1T7L*	
Metallic bezel	Button	Momentary	SPDT	LB①B-M1T1*	LB①B-M1T5*	B: black G: green R: red S: blue W: white Y: yellow
			DPDT	LB①B-M1T2*	LB①B-M1T6*	
			3PDT	LB①B-M1T3*	LB①B-M1T7*	
		Maintained	SPDT	LB①B-A1T1*	LB①B-A1T5*	
			DPDT	LB①B-A1T2*	LB①B-A1T6*	
			3PDT	LB①B-A1T3*	LB①B-A1T7*	
	Lens	Momentary	SPDT	LB①B-M1T1L*	LB①B-M1T5L*	A: amber G: green R: red S: blue W: white Y: yellow
			DPDT	LB①B-M1T2L*	LB①B-M1T6L*	
			3PDT	LB①B-M1T3L*	LB①B-M1T7L*	
		Maintained	SPDT	LB①B-A1T1L*	LB①B-A1T5L*	
			DPDT	LB①B-A1T2L*	LB①B-A1T6L*	
			3PDT	LB①B-A1T3L*	LB①B-A1T7L*	
Guard Type	Button	Momentary	SPDT	LB①B-M1T1*	LB①B-M1T5*	B: black G: green R: red S: blue W: white Y: yellow
			DPDT	LB①B-M1T2*	LB①B-M1T6*	
			3PDT	LB①B-M1T3*	LB①B-M1T7*	
		Maintained	SPDT	LB①B-A1T1*	LB①B-A1T5*	
			DPDT	LB①B-A1T2*	LB①B-A1T6*	
			3PDT	LB①B-A1T3*	LB①B-A1T7*	
	Lens	Momentary	SPDT	LB①B-M1T1L*	LB①B-M1T5L*	A: amber G: green R: red S: blue W: white Y: yellow
			DPDT	LB①B-M1T2L*	LB①B-M1T6L*	
			3PDT	LB①B-M1T3L*	LB①B-M1T7L*	
		Maintained	SPDT	LB①B-A1T1L*	LB①B-A1T5L*	
			DPDT	LB①B-A1T2L*	LB①B-A1T6L*	
			3PDT	LB①B-A1T3L*	LB①B-A1T7L*	

- The guard opens 180 degrees spring-return.
- Pushbuttons can be used with legend markings. Engraving can be done on a marking plate which is placed in the lens, or a clear film can be printed and placed in the lens. See B-133 for details on the marking plate and film.
- Black is available for lens. Black lens consists of a transparent lens and a black marking plate. To specify, see Part Number Development below.
- PC board terminals available for gold contacts. To specify, see Part Number Development below.
- Other bezel sizes available (LBW series). For details, see B-097.

Part Number Development

LB①B-②1T③④*

① Shape

Code	Shape
6	Round / Black Bezel
7	Square / Black Bezel
8	Rectangular / Black Bezel
6M	Round / Metallic Bezel
7M	Square / Metallic Bezel
8M	Rectangular / Metallic Bezel
6G	Round with Guard
7G	Square with Guard
8G	Rectangular with Guard

② Operation

Code	Operation
A	Maintained
M	Momentary

③ Contacts

Code	Contact	Code	Contact
1	Gold/SPDT	5	Silver/SPDT
2	Gold/DPDT	6	Silver/DPDT
3	Gold/3PDT	7	Silver/3PDT

④ Others

Code	Specification	Part No. Example
Blank	Solder/Tab Terminal	—
B	Black Translucent Lens (Lens Only)	LB6B-M1T1LB
V	PC Board Terminal (Gold Contact Only)	LB6B-M1T1V*

For more information, visit http://eu.idec.com

Dimensions

All dimensions in mm.

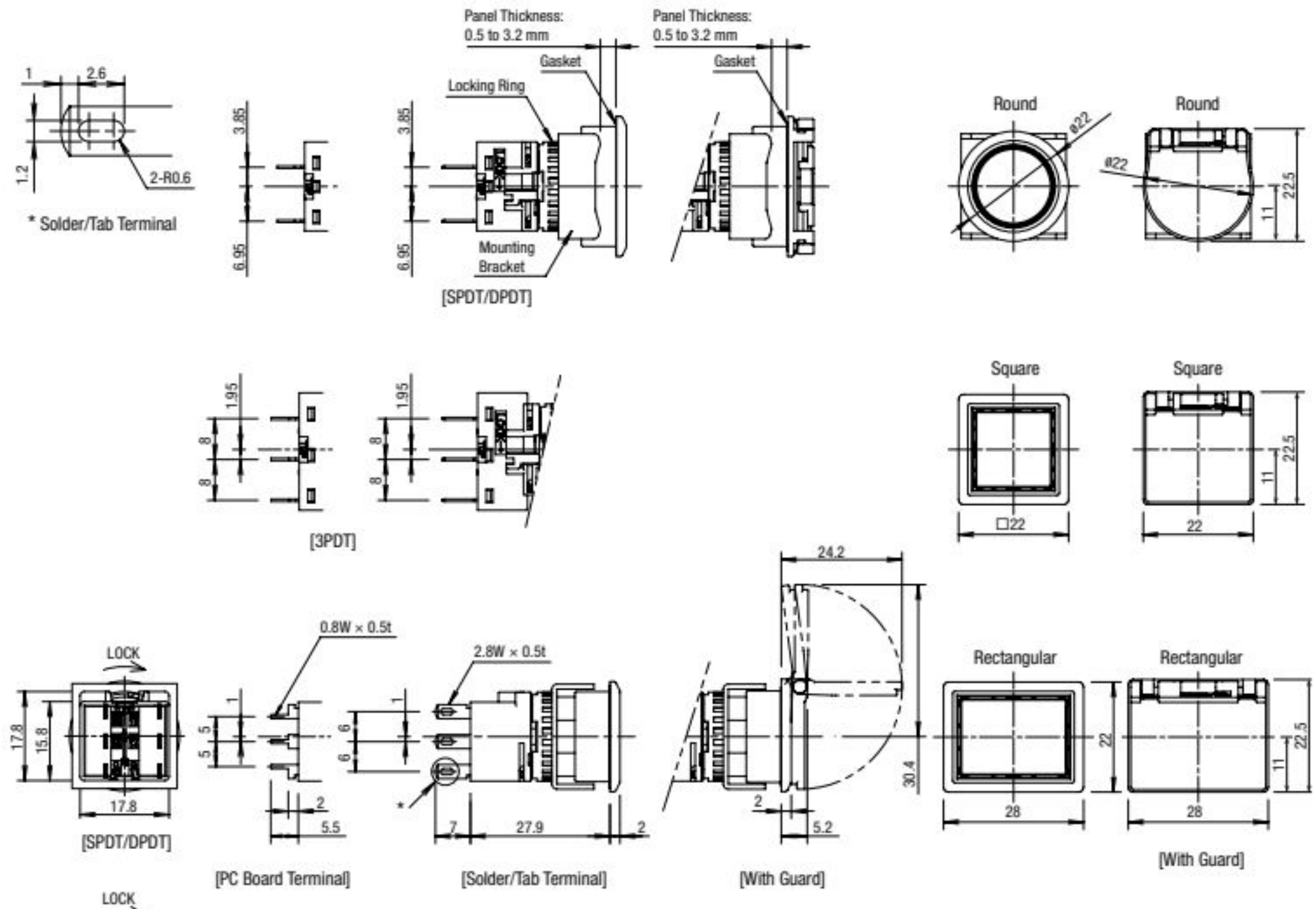

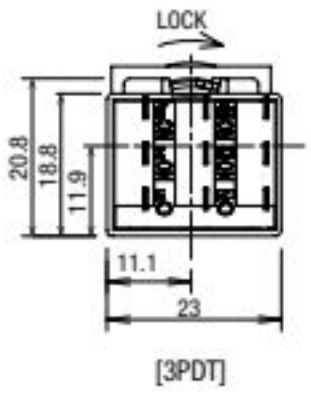

Terminal Arrangement (Bottom View)

SPDT/DPDT Contacts

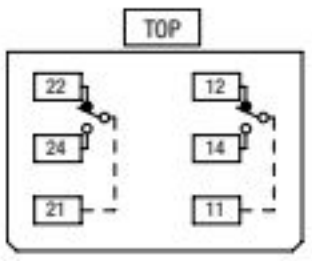

(SPDT contacts on the right only)

3PDT Contacts

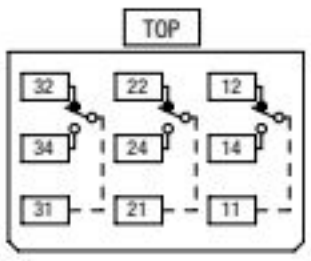

Panel Cut-out for Positioning

Round (LB6B/LB6MB/LB6GB)

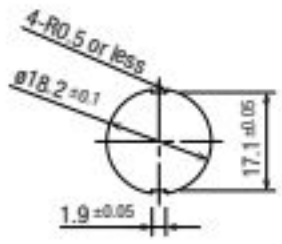

Mounting Hole Layout

Round (LB6B/LB6MB/LB6GB)

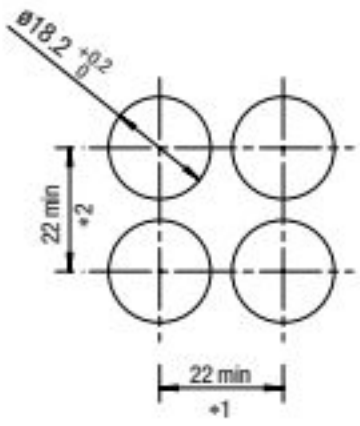

Square (LB7B/LB7MB/LB7GB)

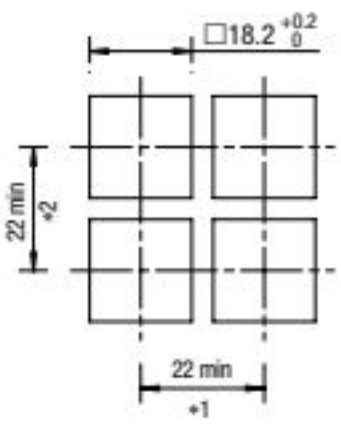

Rectangular (LB8B/LB8MB/LB8GB)

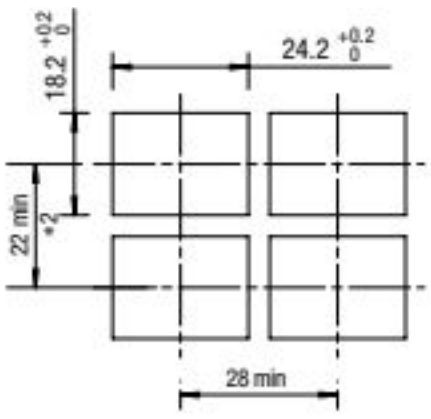

*1: 23.2 mm minimum for 3PDT
*2: 45 mm minimum for switches with guard
Note: When using rubber boot or terminal cover, see dimensions on B-127 and B-128.

- For details on pc board and circuit design, see B-121.
- For details on single board mounting, see B-122.

Download catalogs and CAD from http://eu.idec.com/downloads

Flush Silhouette Switches LB Series

Selector Switches

Solder/Tab Terminal

Package Quantity:1

Part No. / Shape: LB①S-②③T④⑤

Knob Operator

Round / Black Bezel

Square / Black Bezel

Rectangular / Black Bezel

Round / Metallic Bezel

Square / Metallic Bezel

Rectangular / Metallic Bezel

Lever Operator

Round / Metallic Bezel

Square / Metallic Bezel

Rectangular / Metallic Bezel

① Shape	② Operator Position			③ Contact	Part No. Gold Contact	Part No. Silver Contact
Black bezel	90° 2-position	Maintained	L R	SPDT	LB①S-2T1	LB①S-2T5
				DPDT	LB①S-2T2	LB①S-2T6
				3PDT	LB①S-2T3	LB①S-2T7
	45° 3-position	Maintained	L C R	DPDT	LB①S-3T2	LB①S-3T6
				3PDT	LB①S-3T3	LB①S-3T7
		Spring return two-way	L C R	DPDT	LB①S-33T2	LB①S-33T6
				3PDT	LB①S-33T3	LB①S-33T7
Metallic bezel	90° 2-position	Maintained	L R	SPDT	LB①S-2T1	LB①S-2T5
				DPDT	LB①S-2T2	LB①S-2T6
				3PDT	LB①S-2T3	LB①S-2T7
	45° 3-position	Maintained	L C R	DPDT	LB①S-3T2	LB①S-3T6
				3PDT	LB①S-3T3	LB①S-3T7
		Spring return two-way	L C R	DPDT	LB①S-33T2	LB①S-33T6
				3PDT	LB①S-33T3	LB①S-33T7

- Lever operators also available. To specify, see Part Number Development below.
- PC board terminals available for gold contacts. To specify, see Part Number Development below.
- 2-position spring return from right, 3-position spring return from right, and 3-position spring return from left also available. To specify, see Part Number Development below.
- For contact operation, see B-119.
- Other bezel sizes available (LBW series). For details, see B-099.

Part Number Development

LB①S-②③T④⑤

① Shape

Code	Shape
6	Round / Black Bezel
7	Square / Black Bezel
8	Rectangular / Black Bezel
6M	Round / Metallic Bezel
7M	Square / Metallic Bezel
8M	Rectangular / Metallic Bezel

② Operator Position

2-position

Operator Position	
2 Maintained	21 Spring return from right
L R	L R

3-position

Operator Position			
3 Maintained	31 Spring return from right	32 Spring return from left	33 Spring return two-way
L C R	L C R	L C R	L C R

③ Operator

Code	Operator Shape
Blank	Knob
L	Lever

④ Contacts

Code	Contact
1	Gold/SPDT (90° 2-position only)
2	Gold/DPDT
3	Gold/3PDT
5	Silver/SPDT (90° 2-position only)
6	Silver/DPDT
7	Silver/3PDT

⑤ Others

Code	Specification	Part No. Example
Blank	Solder/Tab Terminal	—
V	PC Board Terminal (Gold Contact Only)	LB6S-2T1V

For more information, visit http://eu.idec.com

Dimensions

All dimensions in mm.

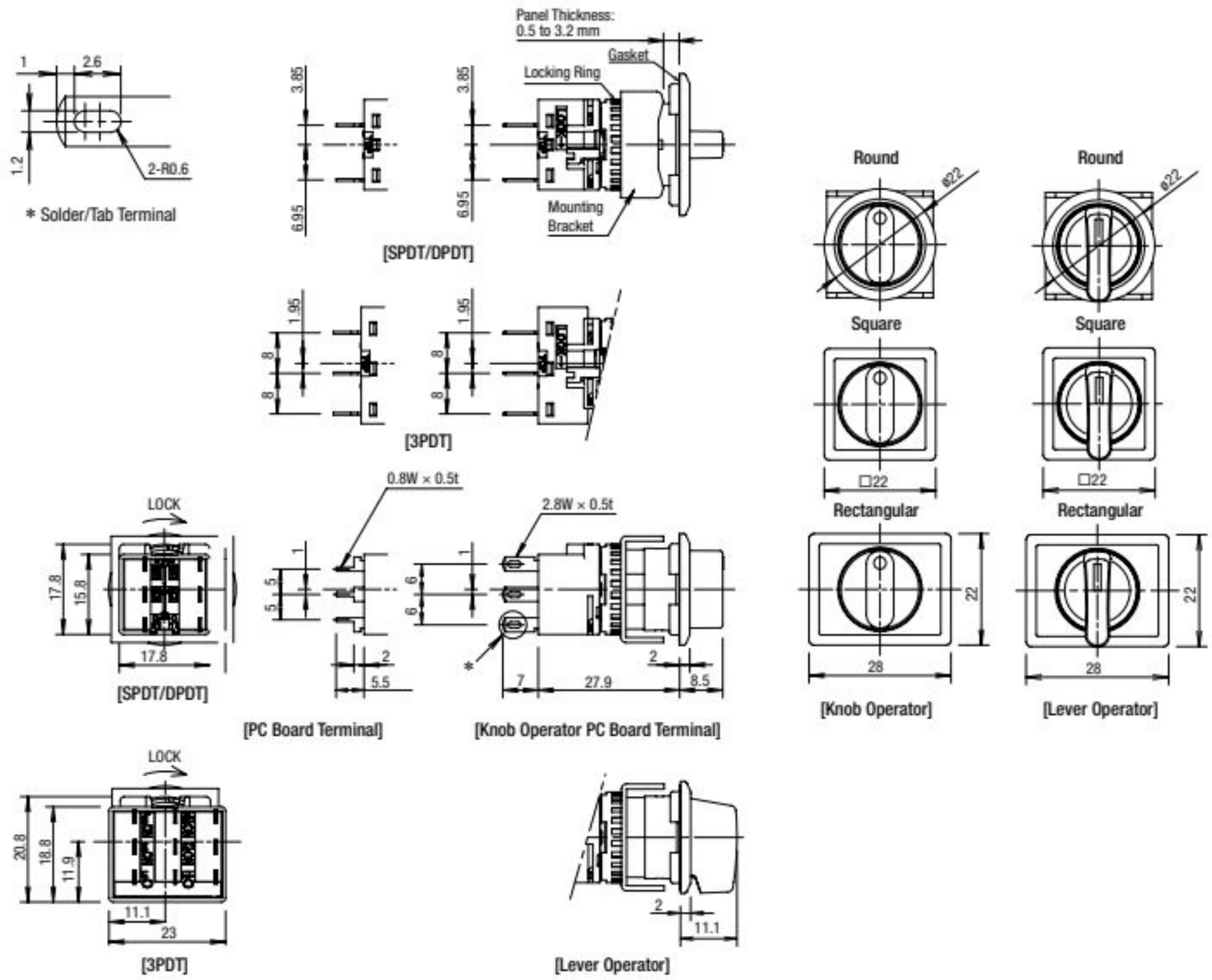

Terminal Arrangement (Bottom View)

SPDT/DPDT Contacts

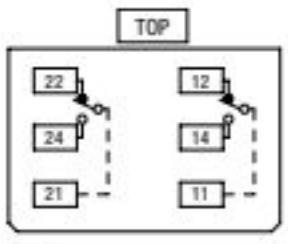

(SPDT contacts on the right only)

3PDT Contacts

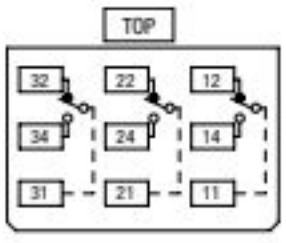

Panel Cut-out for Positioning

Round (LB6S/LB6MS)

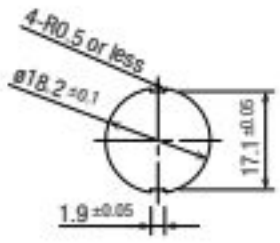

Mounting Hole Layout

Round (LB6S/LB6MS)

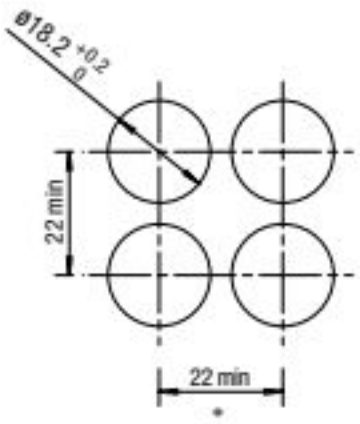

Square (LB7S/LB7MS)

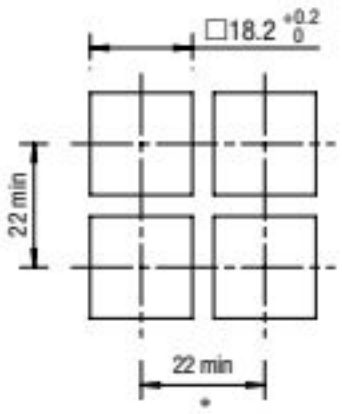

Rectangular (LB8S/LB8MS)

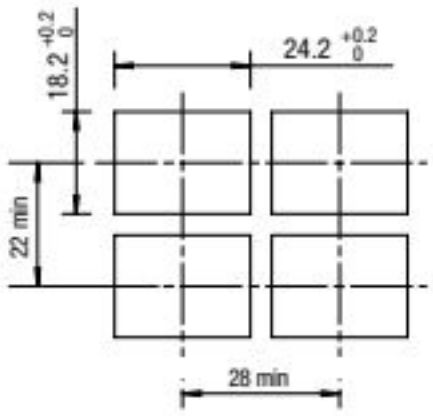

*: 23.2 mm minimum for 3PDT

Note: When using rubber boot or terminal cover, see dimensions on B-128.

- For details on pc board and circuit design, see B-121.
- For details on single board mounting, see B-122.

Download catalogs and CAD from http://eu.idec.com/downloads

APEM
Switches & Pilot Lights
Control Boxes
Emergency Stop Switches
Enabling Switches
Safety Products
Explosion Proof
Terminal Blocks
Relays & Sockets
Circuit Protectors
Power Supplies
LED Illumination
Controllers
Operator Interfaces
Sensors
AUTO-ID
Flush Silhouette
ø16
ø22
ø30
Miniature
Pilot Lights
CW
LW-F
LB
LBW
UP
Flush Bezel

Illuminated Selector Switches

Solder/Tab Terminal

Package Quantity:1

Part No. / Shape: **LB①F-②T③④⑤∗**

Round / Black Bezel

Square / Black Bezel

Round / Metallic Bezel

① Shape	② Operator Position			③ Contact	④ LED Operating Voltage	Part No. Gold Contact	Part No. Silver Contact	∗ Illumination Color Code
Black bezel	90° 2-position	Maintained	L R	SPDT	24V AC/DC	LB①F-2T14∗	LB①F-2T54∗	Specify the color code in place of ∗ in the Part No. G: green R: red PW: pure white
				DPDT	24V AC/DC	LB①F-2T24∗	LB①F-2T64∗	
	45° 3-position	Maintained	L C R	DPDT	24V AC/DC	LB①F-3T24∗	LB①F-3T64∗	
Metallic bezel	90° 2-position	Maintained	L R	SPDT	24V AC/DC	LB①F-2T14∗	LB①F-2T54∗	
				DPDT	24V AC/DC	LB①F-2T24∗	LB①F-2T64∗	
	45° 3-position	Maintained	L C R	DPDT	24V AC/DC	LB①F-3T24∗	LB①F-3T64∗	

- Illuminated selector switches contain an LED unit. For maintenance LED units see B-130.
- PC board terminals available for gold contacts. To specify, see Part Number Development below.
- 5V DC and 12V AC/DC LED operating voltages also available. To specify, see Part Number Development below.
- For contact operation, see B-119.

Part Number Development

LB①F-②T③④⑤∗

① Shape

Code	Shape
6	Round / Black Bezel
6M	Round / Metallic Bezel

② Operator Position

2-position 3-position

Operator Position	
2 Maintained	3 Maintained
L R	L C R

③ Contacts

Code	Contact
1	Gold/SPDT (90° 2-position only)
2	Gold/DPDT
5	Silver/SPDT (90° 2-position only)
6	Silver/DPDT

④ LED Operating Voltage

Code	Rated Operating Voltage
1	5V DC
3	12V AC/DC
4	24V AC/DC

⑤ Others

Code	Specification	Part No. Example
Blank	Solder/Tab Terminal	—
V	PC Board Terminal (Gold Contact Only)	LB6F-2T14V∗

- Specify a color code in place of ∗ in the Part No.

For more information, visit http://eu.idec.com

Dimensions

All dimensions in mm.

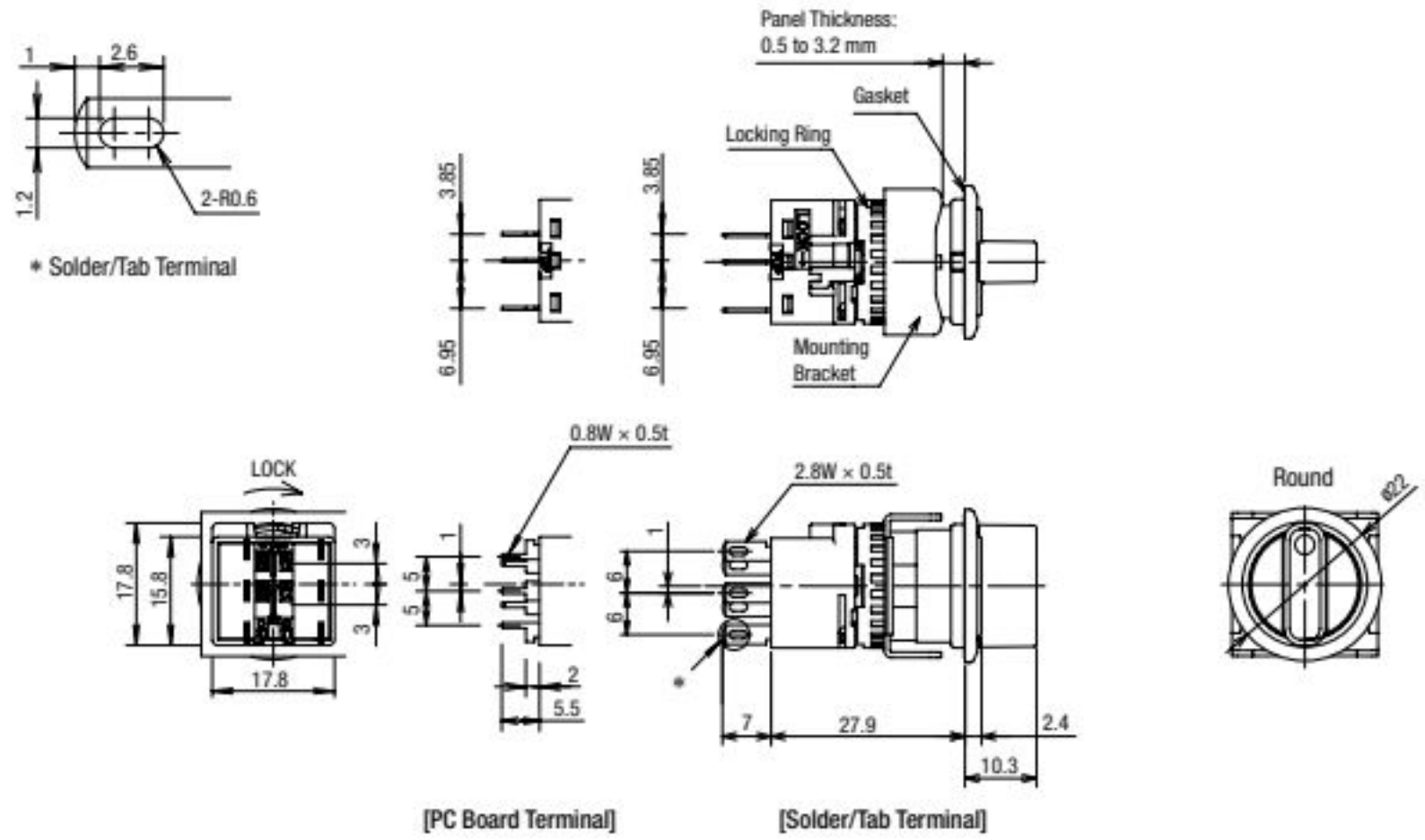

[PC Board Terminal] [Solder/Tab Terminal]

Terminal Arrangement (Bottom View)

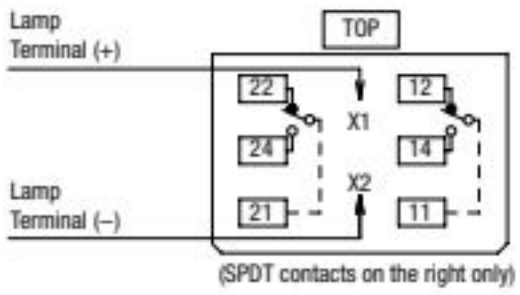

Mounting Hole Layout

Round (LB6F/LB6MF)

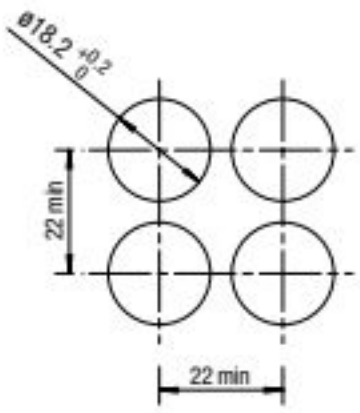

Panel Cut-out for Positioning

Round (LB6F/LB6MF)

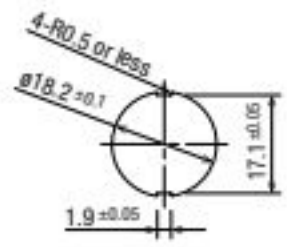

Note: When using terminal cover, see dimensions on B-128.

- For details on pc board and circuit design, see B-121.
- For details on single board mounting, see B-122.

Download catalogs and CAD from http://eu.idec.com/downloads

Flush Silhouette Switches LB Series

Key Selector Switches

Solder/Tab Terminal

Package Quantity:1

Part No. / Shape: **LB①K-②③T④⑤-⑥**

Round / Black Bezel | Square / Black Bezel | Rectangular / Black Bezel | Round / Metallic Bezel | Square / Metallic Bezel | Rectangular / Metallic Bezel

① Shape	② Operator Position		⑤ Key Removable Position	④ Contact	Part No. Gold Contact	Part No. Silver Contact
Black bezel	90° 2-position	Maintained	A: Key removable in all positions (Ⓛ Ⓡ)	SPDT	LB①K-2ST1A	LB①K-2ST5A
				DPDT	LB①K-2ST2A	LB①K-2ST6A
				3PDT	LB①K-2ST3A	LB①K-2ST7A
	45° 3-position	Maintained	A: Key removable in all positions (Ⓛ Ⓒ Ⓡ)	DPDT	LB①K-3ST2A	LB①K-3ST6A
				3PDT	LB①K-3ST3A	LB①K-3ST7A
Metallic bezel	90° 2-position	Maintained	A: Key removable in all positions (Ⓛ Ⓡ)	SPDT	LB①K-2ST1A	LB①K-2ST5A
				DPDT	LB①K-2ST2A	LB①K-2ST6A
				3PDT	LB①K-2ST3A	LB①K-2ST7A
	45° 3-position	Maintained	A: Key removable in all positions (Ⓛ Ⓒ Ⓡ)	DPDT	LB①K-3ST2A	LB①K-3ST6A
				3PDT	LB①K-3ST3A	LB①K-3ST7A

- For operator position, see Part Number Development below.
- For key removable position, see Part Number Development below. The key cannot be removed at the return position.
- Two keys are supplied.
- Besides the standard key (key number 0H), six other keys are available. To specify, see Part Number Development below.
- Disc tumbler keys also available. Only the standard key is available. To specify, see Part Number Development below.
- PC board terminals available for gold contacts. To specify, see Part Number Development below.
- For contact operation, see B-119.
- Other bezel sizes available (LBW series). For details, see B-101.

Part Number Development

LB①K-②③T④⑤-⑥

① Shape

Code	Shape
6	Round / Black Bezel
7	Square / Black Bezel
8	Rectangular / Black Bezel
6M	Round / Metallic Bezel
7M	Square / Metallic Bezel
8M	Rectangular / Metallic Bezel

② Operator Position

Code	Operator Position
2	90° 2-position maintained
21	90° 2-position spring return from right
3	45° 3-position maintained
31	45° 3-position spring return from right
32	45° 3-position spring return from left
33	45°-3-position spring return two-way

③ Key Style

Code	Key Style
S	Wave key
Blank	Disc tumbler key

④ Contacts

Code	Contact
1	Gold/SPDT (90° 2-position only)
2	Gold/DPDT
3	Gold/3PDT
5	Silver/SPDT (90° 2-position only)
6	Silver/DPDT
7	Silver/3PDT

⑤ Key Removal Position

2-position

Key Removable Position			Spring return from right
A: Key removable in all positions (Ⓛ Ⓡ)	B: Key removable at left (Ⓛ ❽)	C: Key removable at right (❶ Ⓡ)	(Ⓛ ❽)

3-position

Key Removable Position			
A: Key removable in all positions (Ⓛ Ⓒ Ⓡ)	B: Key removable at left / center (Ⓛ Ⓒ ❽)	C: Key removable at center / right (❶ Ⓒ Ⓡ)	D: Key removable at center (❶ Ⓒ ❽)
E: Key removable at right / left (Ⓛ ❸ Ⓡ)	G: Key removable at left (Ⓛ ❸ ❽)	H: Key removable at right (❶ ❸ Ⓡ)	

For key selectors with the following operations, the key cannot be removed at the return position.

3-position

Spring return from right	Spring return from left	Spring return two-way
(Ⓛ Ⓒ ❽)	(❶ Ⓒ Ⓡ)	(❶ Ⓒ ❽)

- Key is removable at Ⓛ, Ⓒ, Ⓡ. Key is retained at ❶, ❸, and ❽.

⑥ Key Number

Code	
Blank	Standard key (0H)
1H to 2H	Reversible key
3H to 6H	Non-reversible key

- Wave key only.

Others

Code	Specification	Part No. Example
Blank	Solder/Tab Terminal	—
V	PC Board Terminal (Gold Contact Only)	LB6K-2ST1VA

For more information, visit http://eu.idec.com

Dimensions

All dimensions in mm.

Key Selector Switches with Wave Key

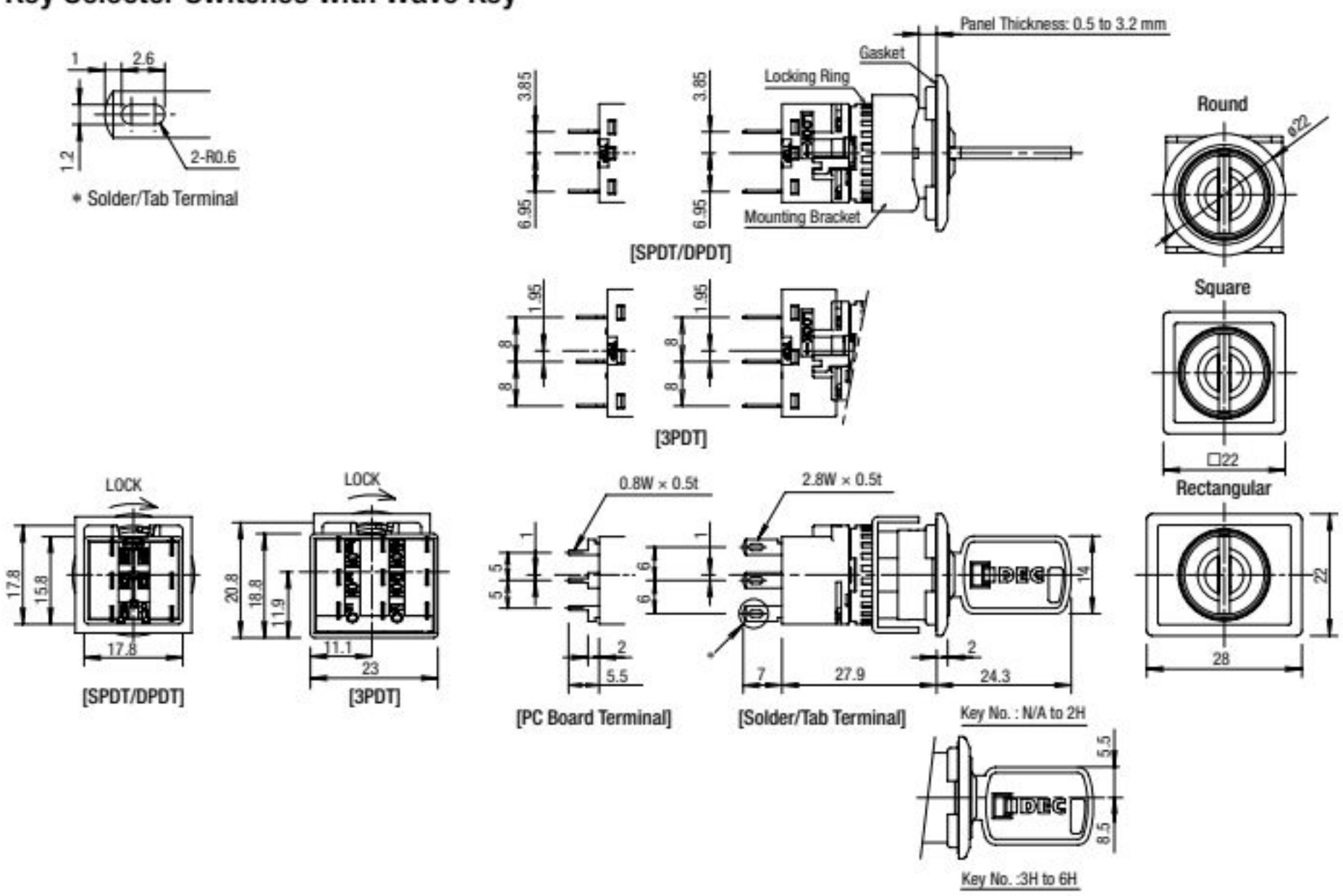

Key Selector Switches with Disc Tumbler Key

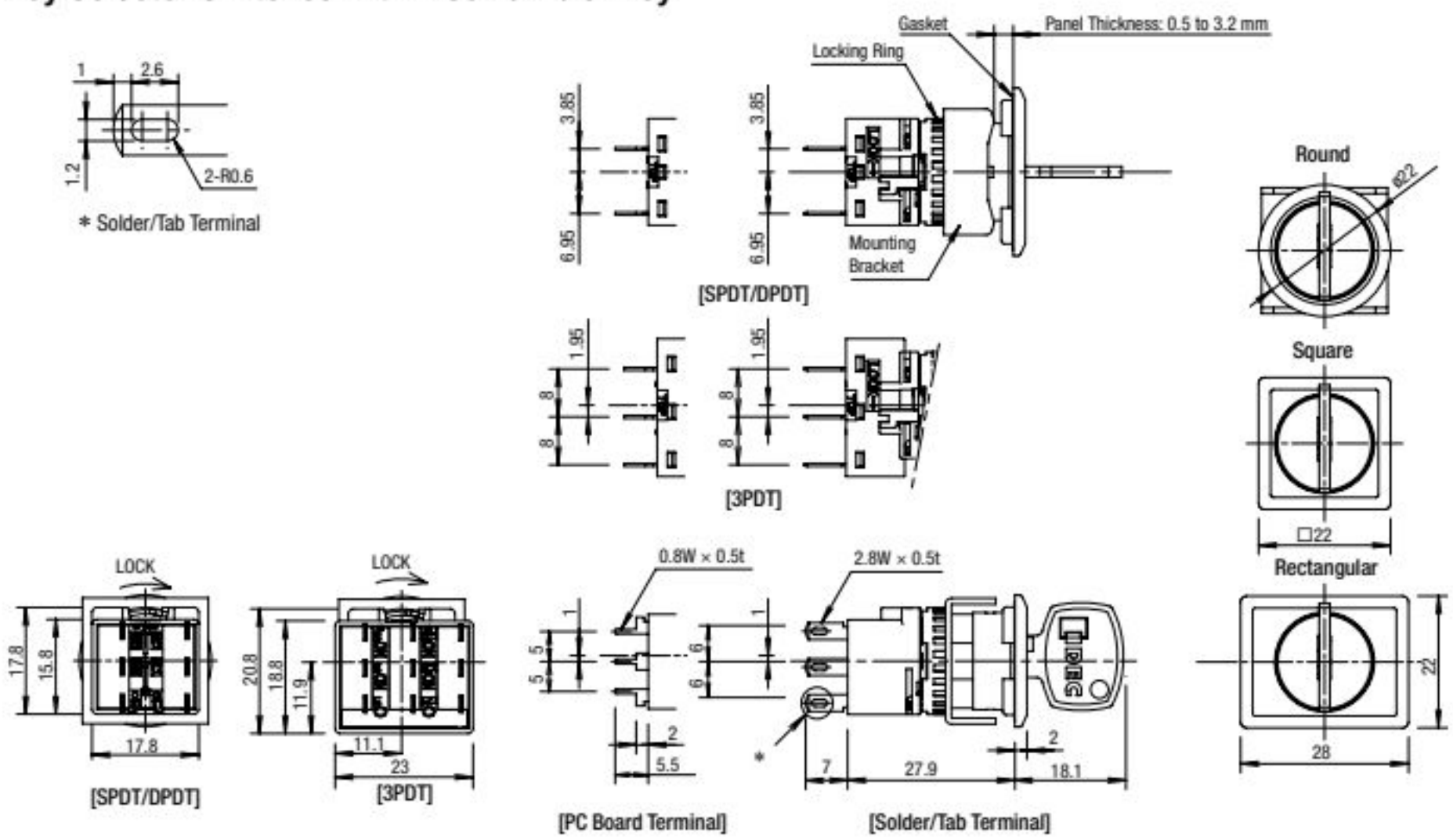

Terminal Arrangement (Bottom View)

SPDT/DPDT Contacts

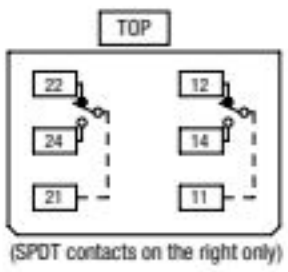

(SPDT contacts on the right only)

3PDT Contacts

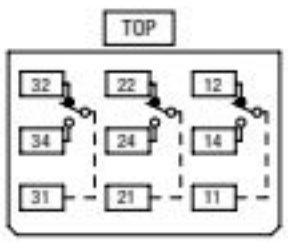

- For details on mounting hole layout, see B-120.
- For details on pc board and circuit design, see B-121.
- For details on single board mounting, see B-122.

Download catalogs and CAD from http://eu.idec.com/downloads

APEM
Switches & Pilot Lights
Control Boxes
Emergency Stop Switches
Enabling Switches
Safety Products
Explosion Proof
Terminal Blocks
Relays & Sockets
Circuit Protectors
Power Supplies
LED Illumination
Controllers
Operator Interfaces
Sensors
AUTO-ID
Flush Silhouette
ø16
ø22
ø30
Miniature
Pilot Lights
CW
LW-F
LB
LBW
UP
Flush Bezel

Flush Silhouette Switches LB Series

Lever Switches

Solder/Tab Terminal

Package Quantity: 1

Part No. / Shape

Round / Black Bezel

Shape	Operator Position			Contact	Part No. Gold Contact	Part No. Silver Contact
Black bezel	2-position	Maintained	U, D	SPDT	LB6T-2T1	LB6T-2T5
				DPDT	LB6T-2T2	LB6T-2T6
				3PDT	LB6T-2T3	LB6T-2T7
	3-position	Maintained	U, C, D	DPDT	LB6T-3T2	LB6T-3T6
				3PDT	LB6T-3T3	LB6T-3T7
		Spring return from top/bottom	U, C, D	DPDT	LB6T-33T2	LB6T-33T6
				3PDT	LB6T-33T3	LB6T-33T7

- PC board terminals available for gold contacts. Add "**V**" to the Part No.
  Example: **LB6T-2T1V**
- For contact operation, see B-119.

APEM
Switches & Pilot Lights
Control Boxes
Emergency Stop Switches
Enabling Switches
Safety Products
Explosion Proof
Terminal Blocks
Relays & Sockets
Circuit Protectors
Power Supplies
LED Illumination
Controllers
Operator Interfaces
Sensors
AUTO-ID
Flush Silhouette
ø16
ø22
ø30
Miniature
Pilot Lights
CW
LW-F
LB
LBW
UP
Flush Bezel

For more information, visit http://eu.idec.com

Dimensions

All dimensions in mm.

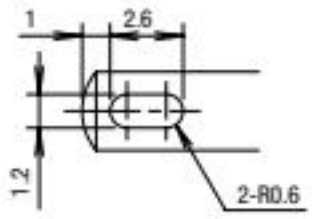

* Solder/Tab Terminal

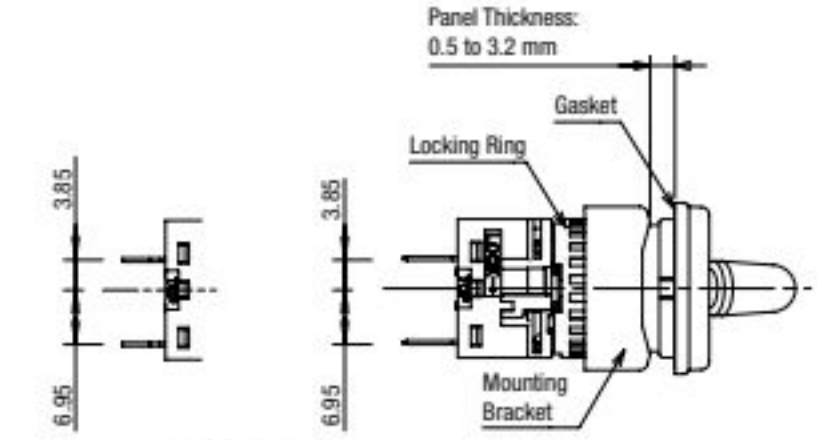

[SPDT/DPDT]

[3PDT]

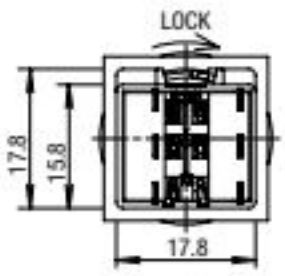

[SPDT/DPDT]

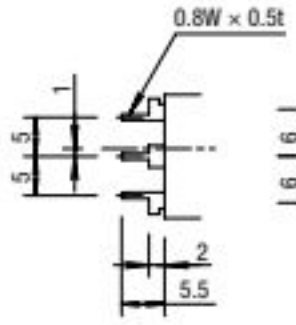

[PC Board Terminal]

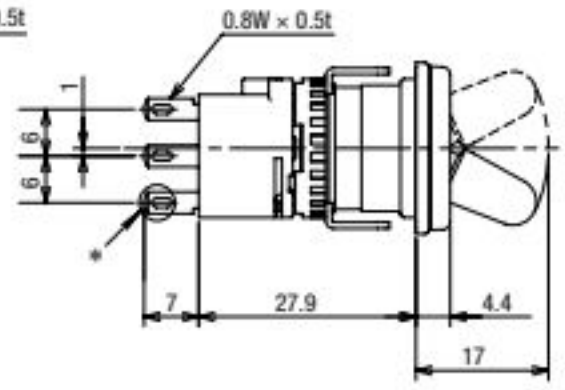

[Solder/Tab Terminal]

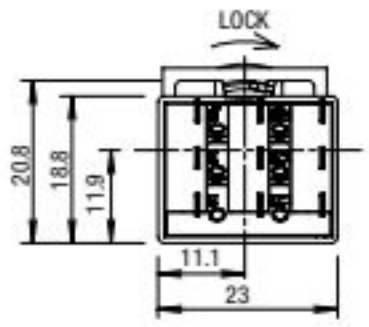

[3PDT]

Terminal Arrangement (Bottom View)

SPDT/DPDT Contacts

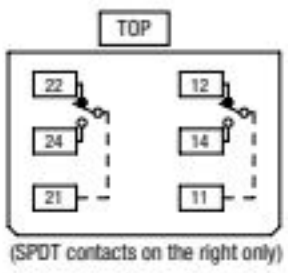

(SPDT contacts on the right only)

3PDT Contacts

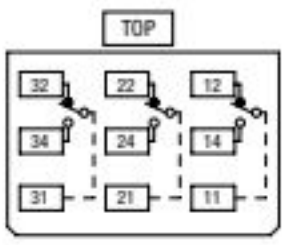

Mounting Hole Layout

Round (LB6T)

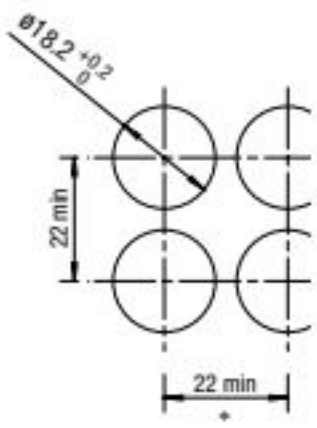

*: 23.2 mm minimum for 3PDT
Note: When using terminal cover, see dimensions on B-128.

Panel Cut-out for Positioning

Round (LB6T)

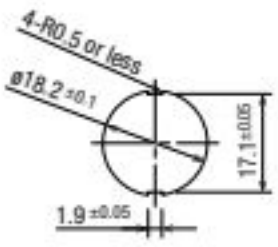

- For details on pc board and circuit design, see B-121.
- For details on single board mounting, see B-122.

Download catalogs and CAD from http://eu.idec.com/downloads

Buzzers

Specifications

Rated Insulation Voltage	30V
Rated Operating Voltage	12, 24V DC
Operating Voltage Range	12V DC±10%, 24V DC±10%
Current Draw	26 mA
Inrush Current	80 mA maximum
Sound Pressure (at 0.1m)	Steady sound: 80 dB minimum (at the rated voltage)
Sound Frequency	2.3±0.3kHz
Response Speed	50 ms maximum
Operating Temperature	–25 to +60°C (no freezing)
Storage Temperature	–30 to +80°C(no freezing)
Operating Humidity	45 to 85% (no condensation)
Insulation Resistance	100 MΩ minimum (500V DC megger)
Dielectric Strength	Between live and dead parts: 1,000V AC, 1 minute
Vibration Resistance	Operating extremes/Damage limits: 5 to 55 Hz, amplitude 0.5 mm
Shock Resistance	Operating extremes: 100m/s² Damage limits:1,000m/s²
Life	1,000 hours minimum (beep sound)
Degree of Protection	IP54 (IEC60529)
Terminal Style	Solder/tab terminal #110 PC board terminal
Weight (approx.)	13g (round), 14g (square)

Standards

- UL, CSA ratngs: Operating voltage 12, 24V DC.
- See website for details on approvals and standards.

Package Quantity: 1

Part No. / Shape

Round / Black Bezel

Rectangular / Black Bezel

Round / Metallic Bezel

Rectangular / Metallic Bezel

Shape		Operating Voltage	Degree of Protection	Part No. Terminal Style: Solder/tab terminal	Part No. Terminal Style: PC board terminal
Black bezel	Round	24V DC	IP54	LB6Z-1T04	LB6Z-1T04V
	Rectangular	24V DC	IP54	LB8Z-1T04	LB8Z-1T04V
Metallic bezel	Round	24V DC	IP54	LB6MZ-1T04	LB6MZ-1T04V
	Rectangular	24V DC	IP54	LB8MZ-1T04	LB8MZ-1T04V

- 12V DC operating voltages also available. Specify "**-1T04**" in place of "**-1T03**" in the Part No.
  Example: **LB6Z-1T03**

Dimensions

All dimensions in mm.

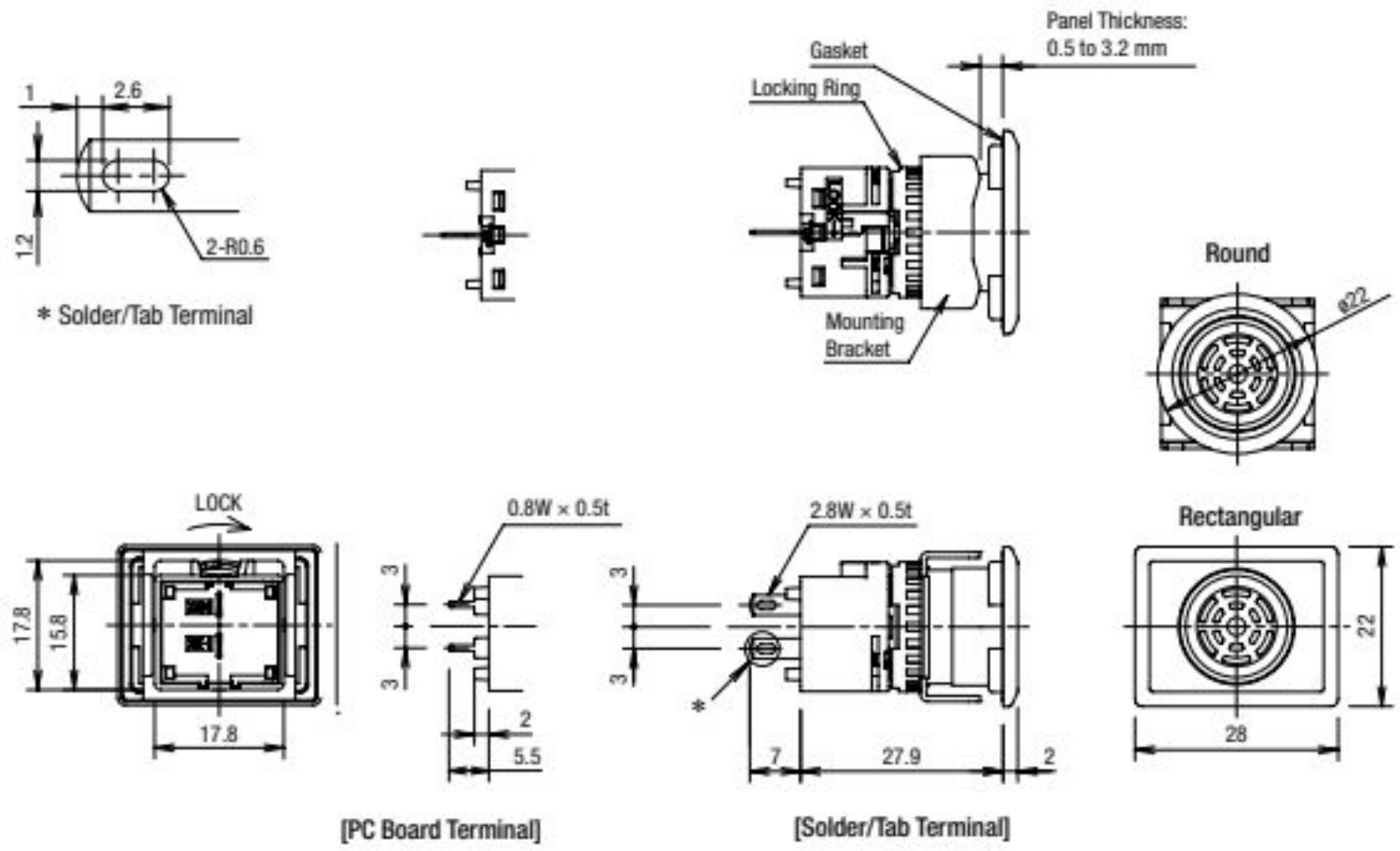

Terminal Arrangement (Bottom View)

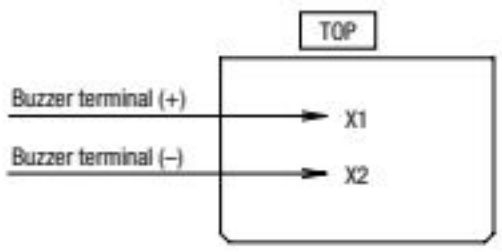

Panel Cut-out for Positioning

Round (LB6Z/LB6MZ)

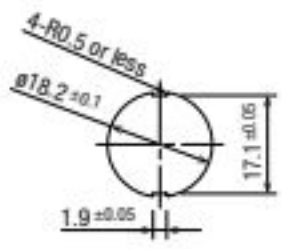

Mounting Hole Layout

Round (LB6Z/LB6MZ)

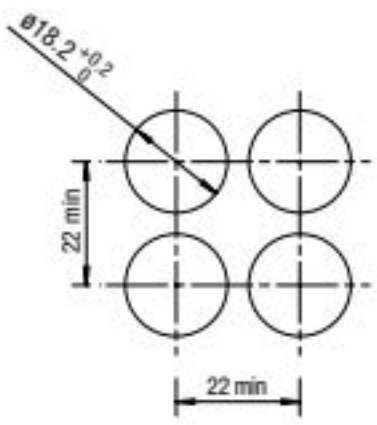

Rectangular (LB8Z/LB8MZ)

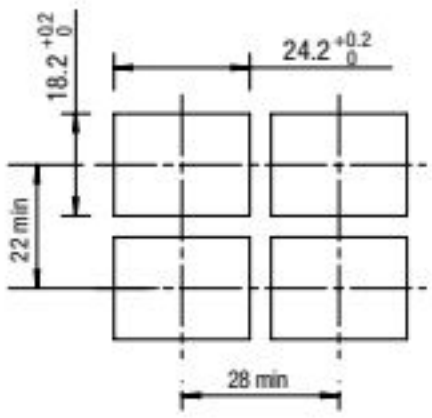

Note: When using rubber boot or terminal cover, see dimensions on B-127 and B-128.

- For details on pc board and circuit design, see B-121.
- For details on single board mounting, see B-122.

APEM
Switches & Pilot Lights
Control Boxes
Emergency Stop Switches
Enabling Switches
Safety Products
Explosion Proof
Terminal Blocks
Relays & Sockets
Circuit Protectors
Power Supplies
LED Illumination
Controllers
Operator Interfaces
Sensors
AUTO-ID
Flush Silhouette
ø16
ø22
ø30
Miniature
Pilot Lights
CW
LW-F
LB
LBW
UP
Flush Bezel

Download catalogs and CAD from http://eu.idec.com/downloads

APEM
Switches & Pilot Lights
Control Boxes
Emergency Stop Switches
Enabling Switches
Safety Products
Explosion Proof
Terminal Blocks
Relays & Sockets
Circuit Protectors
Power Supplies
LED Illumination
Controllers
Operator Interfaces
Sensors
AUTO-ID
Flush Silhouette
ø16
ø22
ø30
Miniature
Pilot Lights
CW
LW-F
LB
LBW
UP
Flush Bezel

LBW-SERIES | Flush Silhouette Switches

Flush Silhouette Switches

Slim Thinnest in the industry (as of May 2012)

Projects only 2mm from the panel. Removable contact blocks ideal for single board mounting. ø26/□26 bezel size for easy operation.

point For sleek and refined style

* Panel cutout (mm)

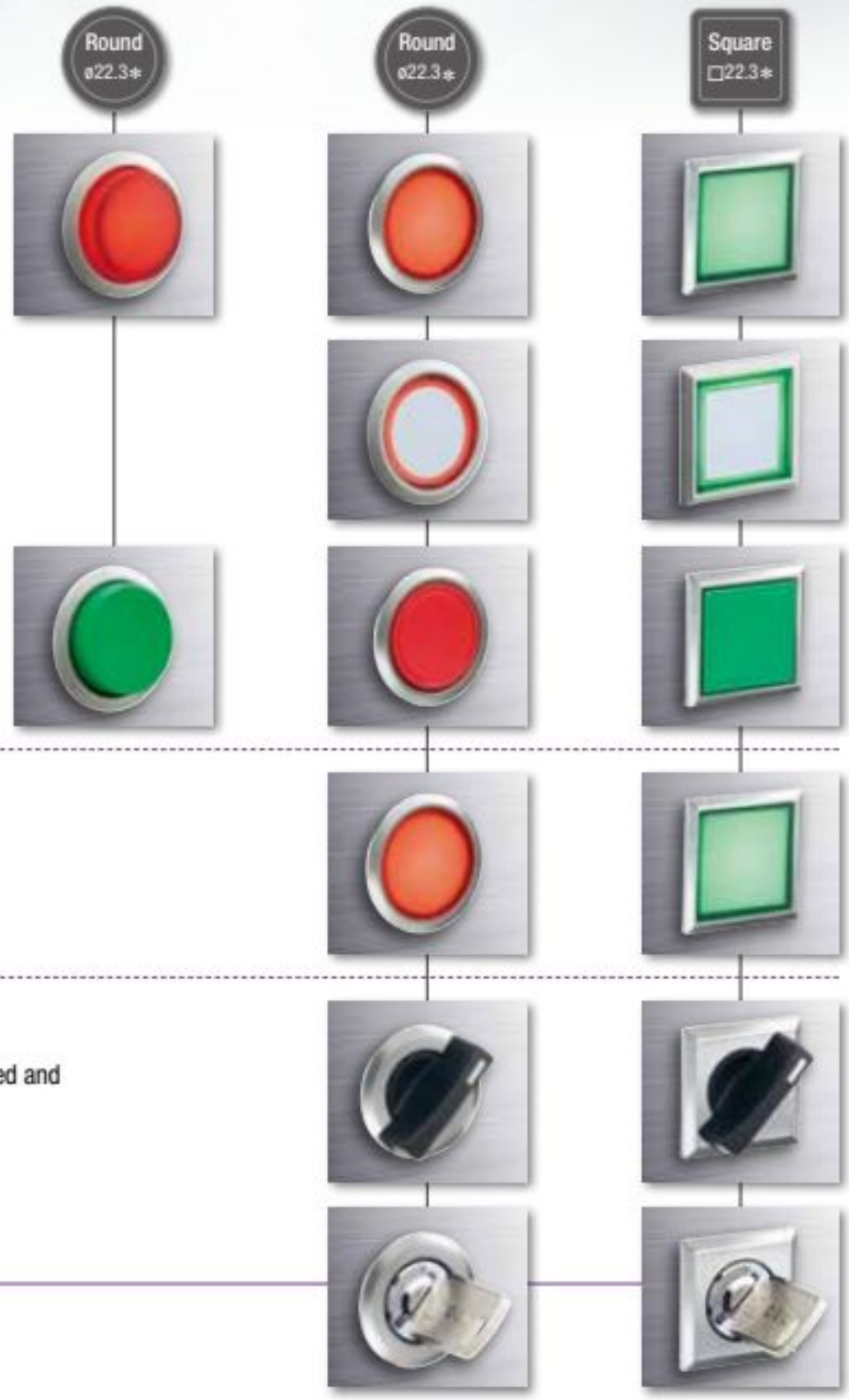

Illuminated Pushbuttons

Illuminated pushbuttons with switch guard available

Ring-illuminated Pushbuttons

Pushbuttons

Marking plates can be used with lens style pushbuttons

*Does not light on.

Pushbuttons with switch guard available

Pilot Lights

Selector Switches

2-position and 3-position selector switches. Maintained and spring return actions available.

Key Selectors ensure safety

Wave Key

Seven different keys to choose from.
Key removable in desired positions.

Stylish Appearance with Advanced Functions

Operation status is easily visible due to illumination on the operator.

Illuminated Selector Switch (LB series only)

Switch guard prevents inadvertent switch operation

Illuminated Pushbutton Color Variations

R (red) G (green) Y (yellow) A (amber) S (blue) PW (pure white)

Pushbutton Color Variations

B (black) G (green) R (red) Y (yellow) S (blue) W (white)

Bezel Color Variations

Metallic Black

Ring-Illuminated Pushbutton Color Variations

R (red) G (green) A (amber) S (blue) PW (pure white)

Ring-Illuminated Pushbutton Bezels

Square Black Round Black Square Metallic Round Metallic

For more information, visit http://eu.idec.com

Flush Silhouette Switches LBW Series

Flush bezel projects only 2 mm from front of panel.

Contact Ratings

Gold Contact (switch base: blue)

Rated Insulation Voltage		250V	
Rated Thermal Current		3A	
Rated Operating Voltage		30V DC	125V AC
Rated Operating Current (electrical life: 100,000 operations)	Resistive Load	0.1A	0.1A
Contact Material		Gold plated silver	

- Minimum applicable load (reference value): 5V AC/DC, 1 mA
  Applicable range is subject to the operating conditions and load.
- See electrical life in Specifications.

Silver Contact (switch base: gray)

Rated Insulation Voltage				250V		
Rated Operating Voltage				30V	125V	250V
Rated Operating Current	Electrical Life 50,000 operations	AC 50/60Hz	Resistive load	—	5A	5A
			Inductive load	—	3A	1.5A
		DC	Resistive load	5A	1.1A	—
			Inductive load	2A	0.4A	—
	Electrical Life 100,000 operations	AC 50/60Hz	Resistive load	—	5A	3A
			Inductive load	—	3A	1.5A
		DC	Resistive load	3A	0.6A	—
			Inductive load	1A	0.22A	—
Rated Thermal Current				5A		
Contact Material				Silver		

- AC inductive load: PF=0.6 to 0.7 DC inductive load: L/R=7 ms max.

LED Ratings

Rated Voltage	5V DC	12V AC/DC	24V AC/DC
Voltage Range	5V DC±5%	12V AC/DC ±10%	24V AC/DC ±10%
LED Part No.	LB9Z-LED5②	LB9Z-LED1②	LB9Z-LED2②
Current Draw	5 mA (typ.)		
Voltage Marking	Marked on the side of the LED unit		
LED Life (reference value)	Approx. 30,000 hours [until the brightness reduces to 50% of the initial value when lit at the rated voltage (direct current) under 25°C environment.]		
Internal Circuit	A, G, R, PW, S		

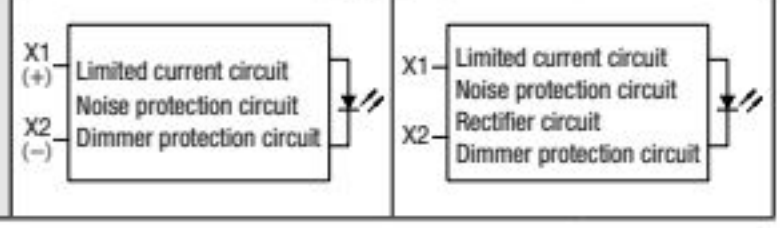

- ② (color code): A (amber), G (green), PW (pure white), R (red), S (blue)
- Use the pure white (PW) module for yellow illumination.
- LED lamp contains a current-limiting resistor.

Specifications

Operating Temperature		–25 to +60°C (no freezing) Illuminated units: –25 to +55°C
Storage Temperature		–30 to +80°C (no freezing)
Operating Humidity		45 to 85% RH (no condensation)
Contact Resistance		50 mΩ maximum (initial value)
Insulation Resistance		100 MΩ minimum (500V DC megger)
Dielectric Strength	Switch Unit	Between live part and ground: 2,000V AC, 1 minute Between terminals of different poles: 2,000V AC, 1 minute Between terminals of the same poles: 1,000V AC, 1 minute
	Illumination Unit	Between live part and ground: 2,000V AC, 1 minute
Vibration Resistance		Operating extremes/Damage limits: 5 to 55 Hz, amplitude 0.5 mm
Shock Resistance		Operating extremes: 100 m/s² Damage limits: 1,000 m/s²
Mechanical Life (minimum operations)		Momentary: 2,000,000 Maintained: 250,000 Selector switches: 250,000 Key selector switches: 250,000
Electrical Life (minimum operations)		Momentary: 50,000 / 100,000 (*1) Maintained: 50,000 / 100,000 (*2) Selector switches: 50,000 / 100,000 (*2) Key selector switches: 50,000 / 100,000 (*2)
Degree of Protection		IP65 (IEC 60529)
Terminal Style		Solder/tab terminal #110 PC board terminal
Weight (approx.)		16g (LBW7L-M1T24) 14g (LBW7P-1T04) 15g (LBW7B-M1T2) 17g (LBW7S-2T2) 29g (LBW7K-2ST2A) 17g (LBW7GL-M1T24) 18g (LBW7GB-M1T2)

*1: Switching frequency 1,800 operations/h.
*2: Switching frequency 1,200 operations/h.

Download catalogs and CAD from http://eu.idec.com/downloads

Flush Silhouette Switches LBW Series

Illuminated Pushbuttons

Solder/Tab Terminal

Package Quantity:1

Part No. / Shape: LBW①L-②③T④⑤⑥＊

Flush

Round / Black Bezel | Square / Black Bezel | Round / Metallic Bezel | Square / Metallic Bezel | Round with Guard | Square with Guard

Extended

(black bezel is also available)

Flush Ring-illuminated

(black bezel is also available)

① Shape	② Operation	④ Contact	⑤ LED Operating Voltage	Part No.	＊ Illumination Color Code
Black bezel	Momentary	Gold/SPDT	24V AC/DC	LBW①L-M③T14＊	Specify the color code in place of ＊ in the Part No. A: amber G: green PW: pure white R: red S: blue Y: yellow
		Gold/DPDT		LBW①L-M③T24＊	
	Maintained	Gold/SPDT	24V AC/DC	LBW①L-A③T14＊	
		Gold/DPDT		LBW①L-A③T24＊	
Metallic bezel	Momentary	Gold/SPDT	24V AC/DC	LBW①L-M③T14＊	
		Gold/DPDT		LBW①L-M③T24＊	
	Maintained	Gold/SPDT	24V AC/DC	LBW①L-A③T14＊	
		Gold/DPDT		LBW①L-A③T24＊	
Guard Type	Momentary	Gold/SPDT	24V AC/DC	LBW①L-M③T14＊	
		Gold/DPDT		LBW①L-M③T24＊	
	Maintained	Gold/SPDT	24V AC/DC	LBW①L-A③T14＊	
		Gold/DPDT		LBW①L-A③T24＊	

- Flush/Extended color code: A (amber), G (green), PW (pure white), R (red), S (blue), Y (yellow)
- Ring-illuminated color code: PW (pure white), W (white), WA (amber), WG (green), WR (red), WS (blue)
- Illuminated pushbuttons contain an LED unit. For details on LED units, see B-130.
- The guard opens 180 degrees spring-return.
- Illuminated pushbuttons can be used with legend markings. Engraving can be done on a marking plate which is placed in the lens, or a clear film can be printed and placed in the lens. See B-134 for details on the marking plate and film.
- White lens type (when light is off) are available. Clear lens is used instead of colored lens for amber, green, red, and blue illuminated pushbuttons. Amber, green, red, or blue LED units are used. To specify, see Part Number Development below.
- PC board terminals available for gold contacts. Silver contacts also available. To specify, see Part Number Development below.
- Extended pushbuttons available. To specify, see Part Number Development below. Pushbuttons with guard is not available. Extended pushbutton is available with momentary operation only.
- Flush ring-illuminated style is available. See Part Number Development below (③). Guard is not available with flush ring-illuminated style.
- 5V DC and 12V AC/DC LED operating voltages also available.
- Other bezel sizes available (LB series). For details, see B-075.

Part Number Development

LBW①L-②③T④⑤⑥＊

① Shape

Code	Shape
6	Round / Black Bezel
7	Square / Black Bezel
6M	Round / Metallic Bezel
7M	Square / Metallic Bezel
6G	Round with Guard
7G	Square with Guard

② Operation

Code	Operation
A	Maintained
M	Momentary

③ Operator Style

Code	Operator Style
1	Flush
2	Extended
1R	Flush Ring-illuminated

- Extended style is available only for round (black/metallic bezel) and in momentary operation.
- Guard model is not available for Flush Ring-illuminated types. Also, Y (yellow) is not available.

④ Contacts

Code	Contact
1	Gold/SPDT
2	Gold/DPDT
5	Silver/SPDT
6	Silver/DPDT

⑤ LED Operating Voltage

Code	Rated Operating Voltage
1	5V DC
3	12V AC/DC
4	24V AC/DC

⑥ Others

Code	Specification	Part No. Example
Blank	Solder/Tab Terminal	—
V	PC Board Terminal (Gold Contact Only)	LBW6L-M1T14V＊

- Specify the color code in place of ＊ in the table above.

For more information, visit http://eu.idec.com

Dimensions

All dimensions in mm.

Flush/Ring-illuminated

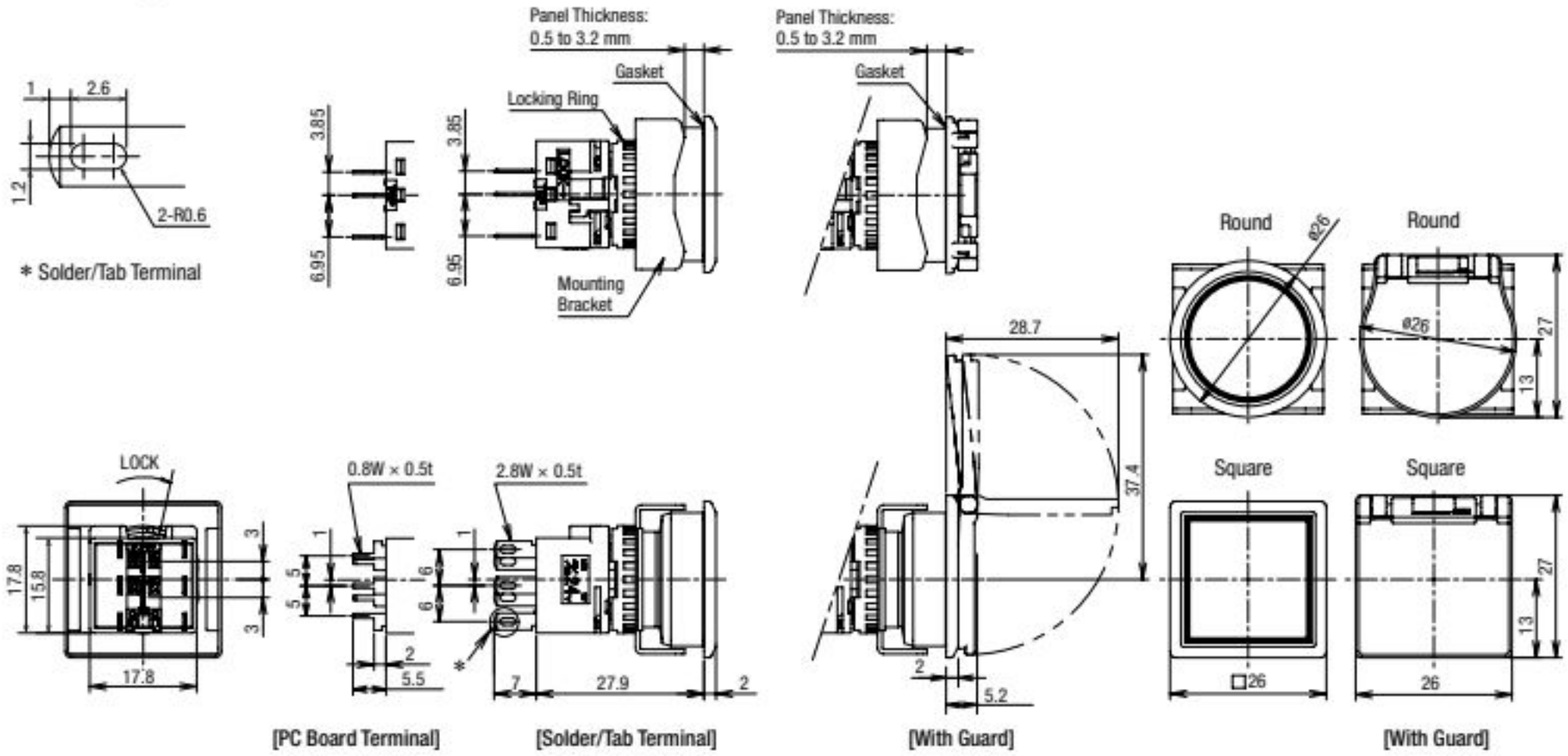

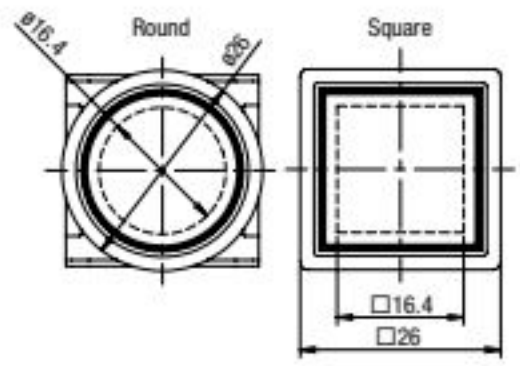

Extended

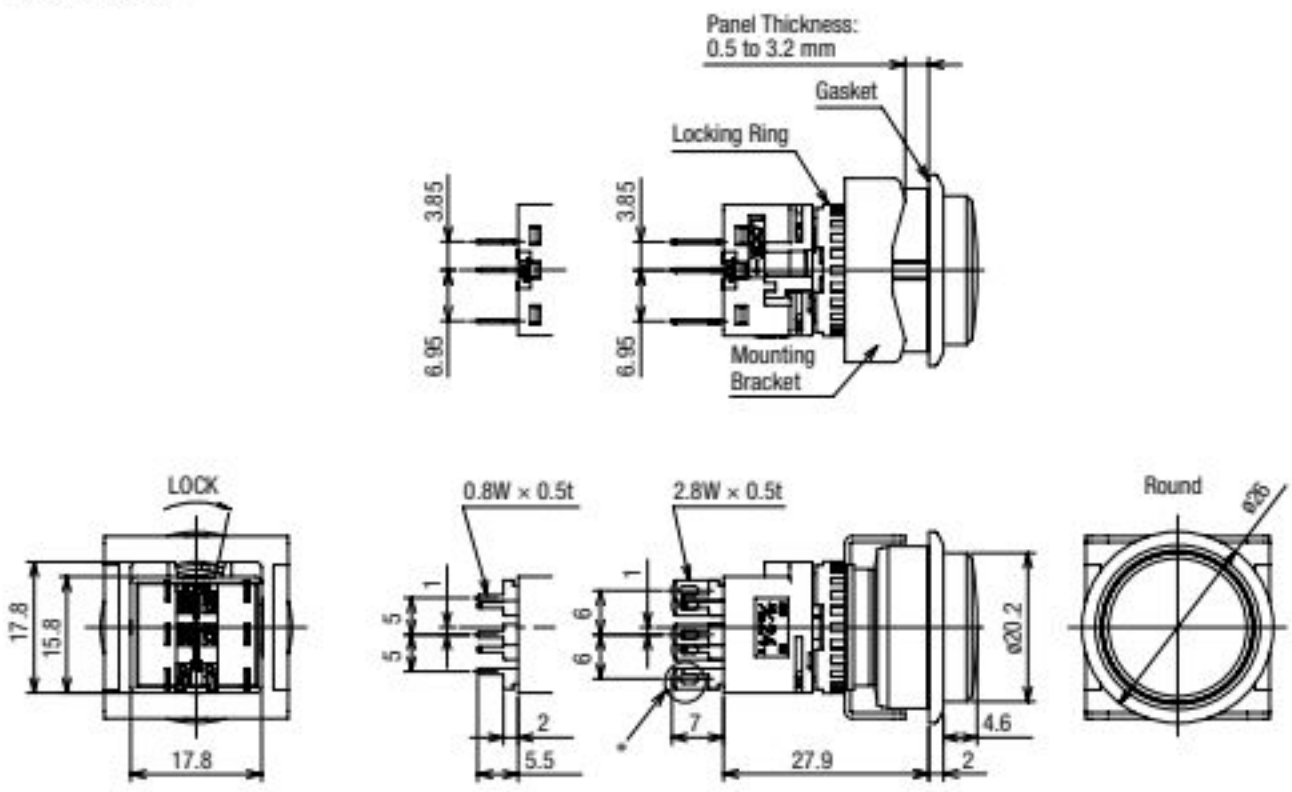

Terminal Arrangement (Bottom View)

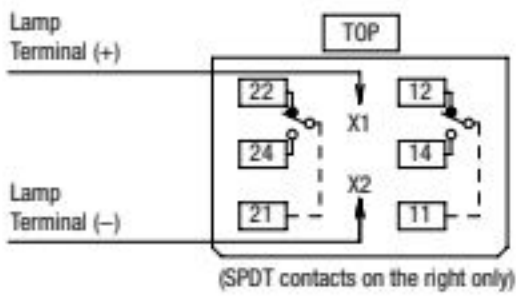

- For details on pc board and circuit design, see B-121.
- For details on single board mounting, see B-122.

Mounting Hole Layout

Round (LBW6/LBW6M)

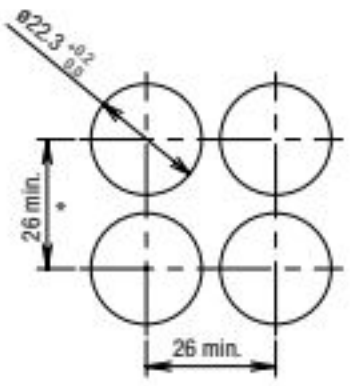

Square (LBW7/LBW7M)

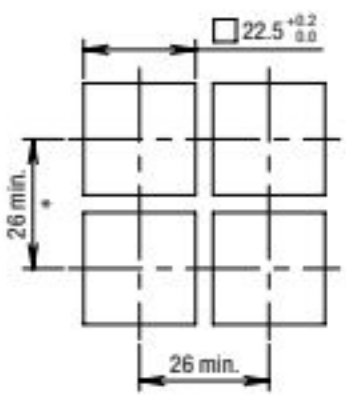

*: 53 mm minimum for switches with guard.

Download catalogs and CAD from http://eu.idec.com/downloads

Pilot Lights

Solder/Tab Terminal

Package Quantity:1

Part No. / Shape	LBW①P-1T0②③＊

Round / Black Bezel

Square / Black Bezel

Round / Metallic Bezel

Square / Metallic Bezel

① Shape	③ LED Operating Voltage	Part No.	＊ Illumination Color Code
Black Bezel	24V AC/DC	LBW①P-1T04＊	Specify the color code in place of ＊ in the Part No. A: amber G: green PW: pure white R: red S: blue Y: yellow
Metallic Bezel	24V AC/DC	LBW①P-1T04＊	

- Pilot lights contain an LED unit. For maintenance LED units see B-130.
- Legends and symbols can be engraved on a marking plate or film to be inserted under the lens by users for labelling purposes. See B-134 for details.
- White lens type (when light is off) are available. Clear lens is used instead of colored lens for amber, green, red, and blue pilot lights. Amber, green, red, or blue LED units are used. To specify, see Part Number Development below.
- PC board terminals available. To specify, see Part Number Development below.
- 5V DC and 12V AC/DC LED operating voltages also available.
- Other bezel sizes available (LB series). For details, see B-077.

Part Number Development

LBW①P-1T0②③＊

① Shape

Code	Shape
6	Round / Black Bezel
7	Square / Black Bezel
6M	Round / Metallic Bezel
7M	Square / Metallic Bezel

② LED Operating Voltage

Code	Rated Operating Voltage
1	5V DC
3	12V AC/DC
4	24V AC/DC

③ Others

Code	Specification	Part No. Example
Blank	Solder/Tab Terminal	—
V	PC Board Terminal	LBW6P-1T04V＊

- Specify the color code in place of ＊ in the table above.

For more information, visit http://eu.idec.com

Dimensions

All dimensions in mm.

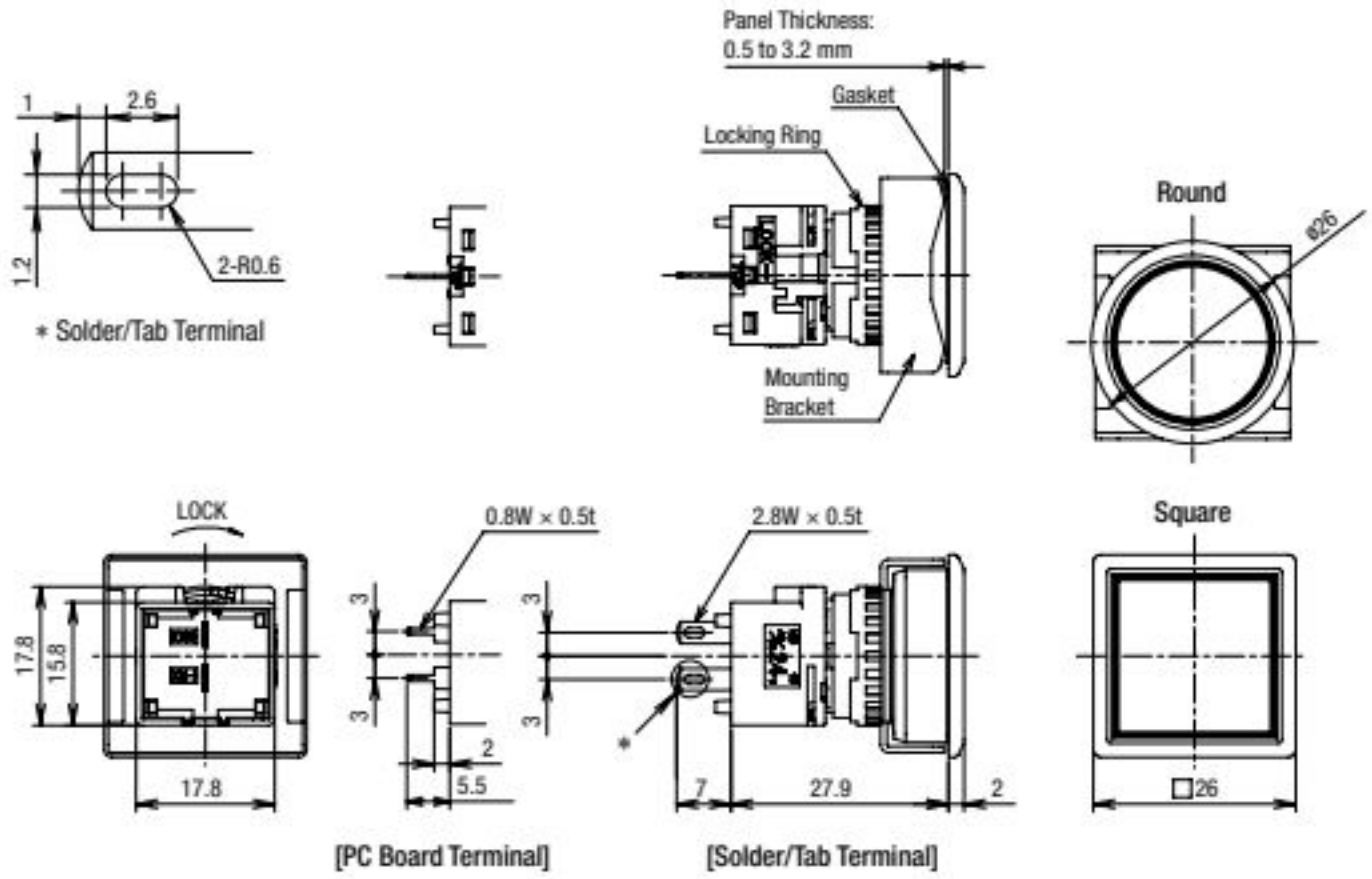

Terminal Arrangement (Bottom View)

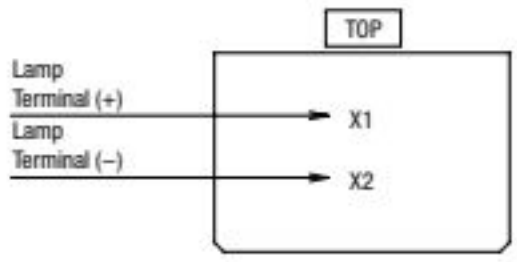

Panel Cut-out for Positioning

Round (LBW6P/LBW6MP)

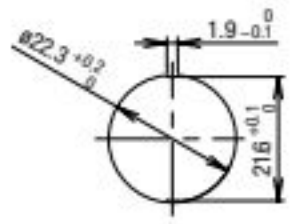

Mounting Hole Layout

Round (LBW6P/LBW6MP)

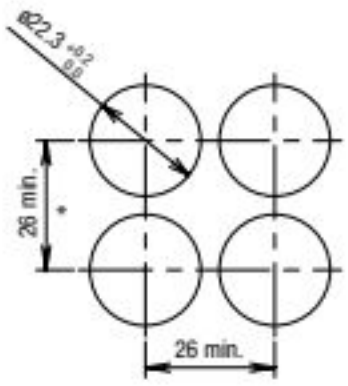

Square (LBW7P/LBW7MP)

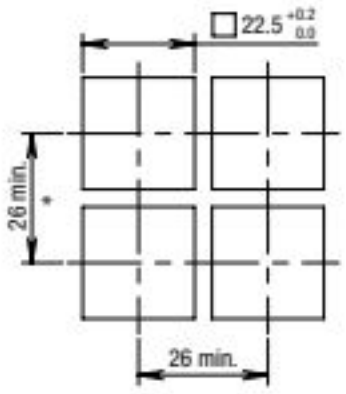

- For details on pc board and circuit design, see B-121.
- For details on single board mounting, see B-122.

APEM
Switches & Pilot Lights
Control Boxes
Emergency Stop Switches
Enabling Switches
Safety Products
Explosion Proof
Terminal Blocks
Relays & Sockets
Circuit Protectors
Power Supplies
LED Illumination
Controllers
Operator Interfaces
Sensors
AUTO-ID

Flush Silhouette
ø16
ø22
ø30
Miniature
Pilot Lights

CW
LW-F
LB
LBW
UP
Flush Bezel

Download catalogs and CAD from http://eu.idec.com/downloads

Flush Silhouette Switches LBW Series

Pushbuttons

Solder/Tab Terminal

Package Quantity:1

Part No. / Shape: **LBW①B-②1T③④＊**

Flush

Round / Black Bezel

Square / Black Bezel

Round / Metallic Bezel

Square / Metallic Bezel

Round with Guard

Square with Guard

Extended

Round only
(metallic bezel available)

① Shape	Button Style	② Operation	③ Contact	Part No. Gold Contact	Part No. Silver Contact	＊ Illumination Color Code
Black bezel	Button	Momentary	SPDT	LBW①B-M1T1＊	LBW①B-M1T5＊	Specify the color code in place of ＊ in the Part No. B: black G: green R: red S: blue W: white Y: yellow
			DPDT	LBW①B-M1T2＊	LBW①B-M1T6＊	
			3PDT	LBW①B-M1T3＊	LBW①B-M1T7＊	
		Maintained	SPDT	LBW①B-A1T1＊	LBW①B-A1T5＊	
			DPDT	LBW①B-A1T2＊	LBW①B-A1T6＊	
			3PDT	LBW①B-A1T3＊	LBW①B-A1T7＊	
Metallic bezel	Button	Momentary	SPDT	LBW①B-M1T1＊	LBW①B-M1T5＊	
			DPDT	LBW①B-M1T2＊	LBW①B-M1T6＊	
			3PDT	LBW①B-M1T3＊	LBW①B-M1T7＊	
		Maintained	SPDT	LBW①B-A1T1＊	LBW①B-A1T5＊	
			DPDT	LBW①B-A1T2＊	LBW①B-A1T6＊	
			3PDT	LBW①B-A1T3＊	LBW①B-A1T7＊	
Guard Type	Button	Momentary	SPDT	LBW①B-M1T1＊	LBW①B-M1T5＊	
			DPDT	LBW①B-M1T2＊	LBW①B-M1T6＊	
			3PDT	LBW①B-M1T3＊	LBW①B-M1T6＊	
		Maintained	SPDT	LBW①B-A1T1＊	LBW①B-A1T5＊	
			DPDT	LBW①B-A1T2＊	LBW①B-A1T6＊	
			3PDT	LBW①B-A1T3＊	LBW①B-A1T7＊	

- The guard opens 180 degrees spring-return.
- PC board terminals available for gold contacts. To specify, see Part Number Development below.
- Pushbuttons can be used with legend markings engraved on marking plates and lens buttons with clear film inserted in the lens is available. To specify, see Part Number Development below. See B-134 for details on the marking plate and film.
- Extended pushbuttons available. To specify, see Part Number Development below. Pushbuttons with guard is not available.
  Extended pushbutton is available with momentary operation only.
- Other bezel sizes available (LB series). For details, see B-079.

Part Number Development

LBW①B-②③1T④⑤＊

① Shape

Code	Shape
6	Round / Black Bezel
7	Square / Black Bezel
6M	Round / Metallic Bezel
7M	Square / Metallic Bezel
6G	Round with Guard
7G	Square with Guard

② Operation

Code	Operation
A	Maintained
M	Momentary

③ Operator Style

Code	Operation
1	Flush
2	Extended *

* Extended style is available only for round (black/metallic bezel) and in momentary operation. Guard model is not available.

④ Contacts

Code	Contact	Code	Contact
1	Gold/SPDT	5	Silver/SPDT
2	Gold/DPDT	6	Silver/DPDT
3	Gold/3PDT	7	Silver/3PDT

⑤ Others

Code	Specification	Part No. Example
Blank	Solder/Tab Terminal	—
L (Note 1)	Lens	LBW6B-M1T1L＊
V	PC Board Terminal (Gold Contact Only)	LB6WB-M1T1V＊
VL (Note 1)	PC Board Terminal with Lens (Gold Contact Only)	LB6WB-M1T1VL＊

Note 1: Codes L and VL are available with flush operator only.

- Color code (＊) for lens:
  A (amber), B (translucent lens with black nameplate), G (green), R (red), S (blue), W (white), Y (yellow)

For more information, visit http://eu.idec.com

Dimensions

All dimensions in mm.

Flush Pushbutton

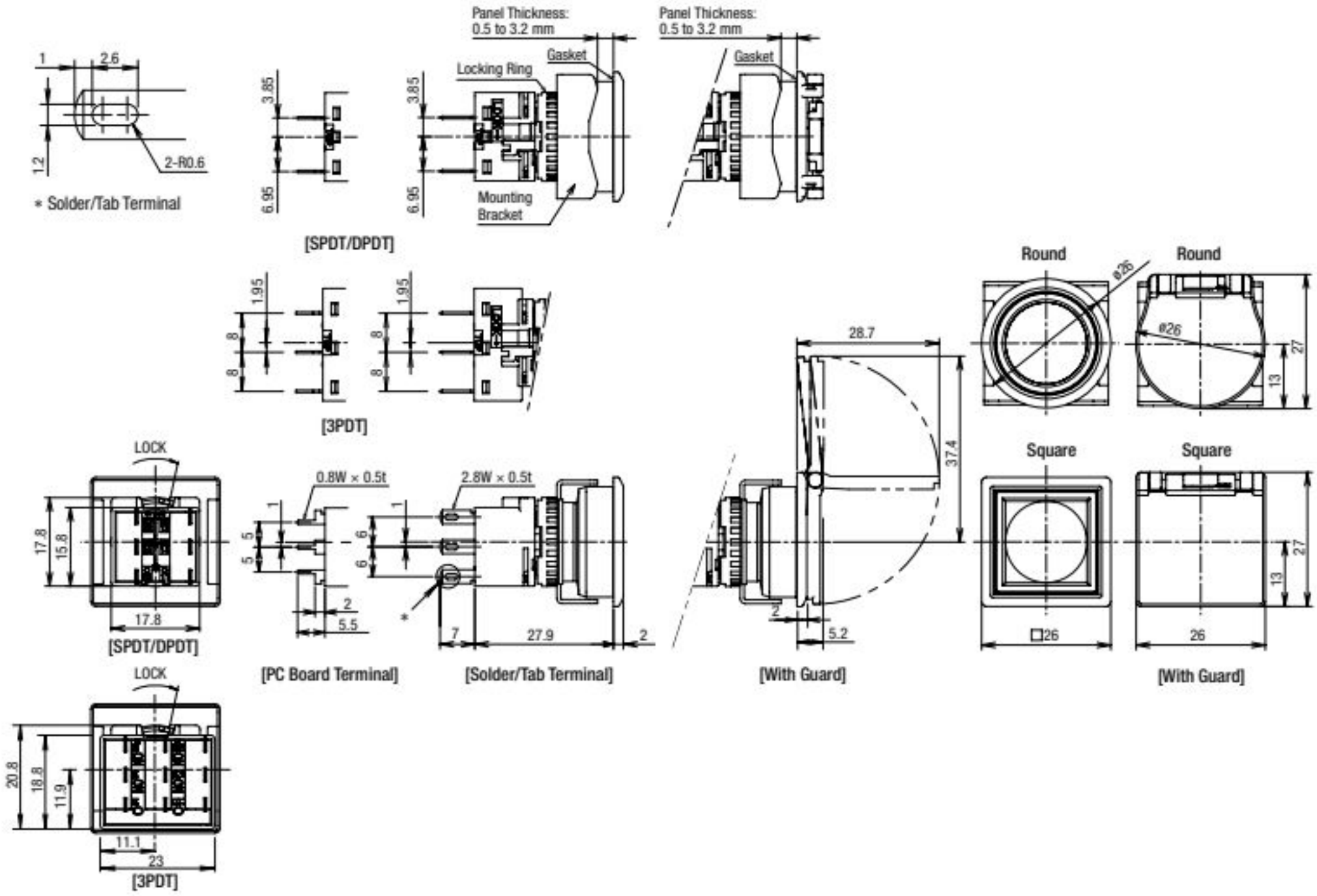

Extended Pushbutton

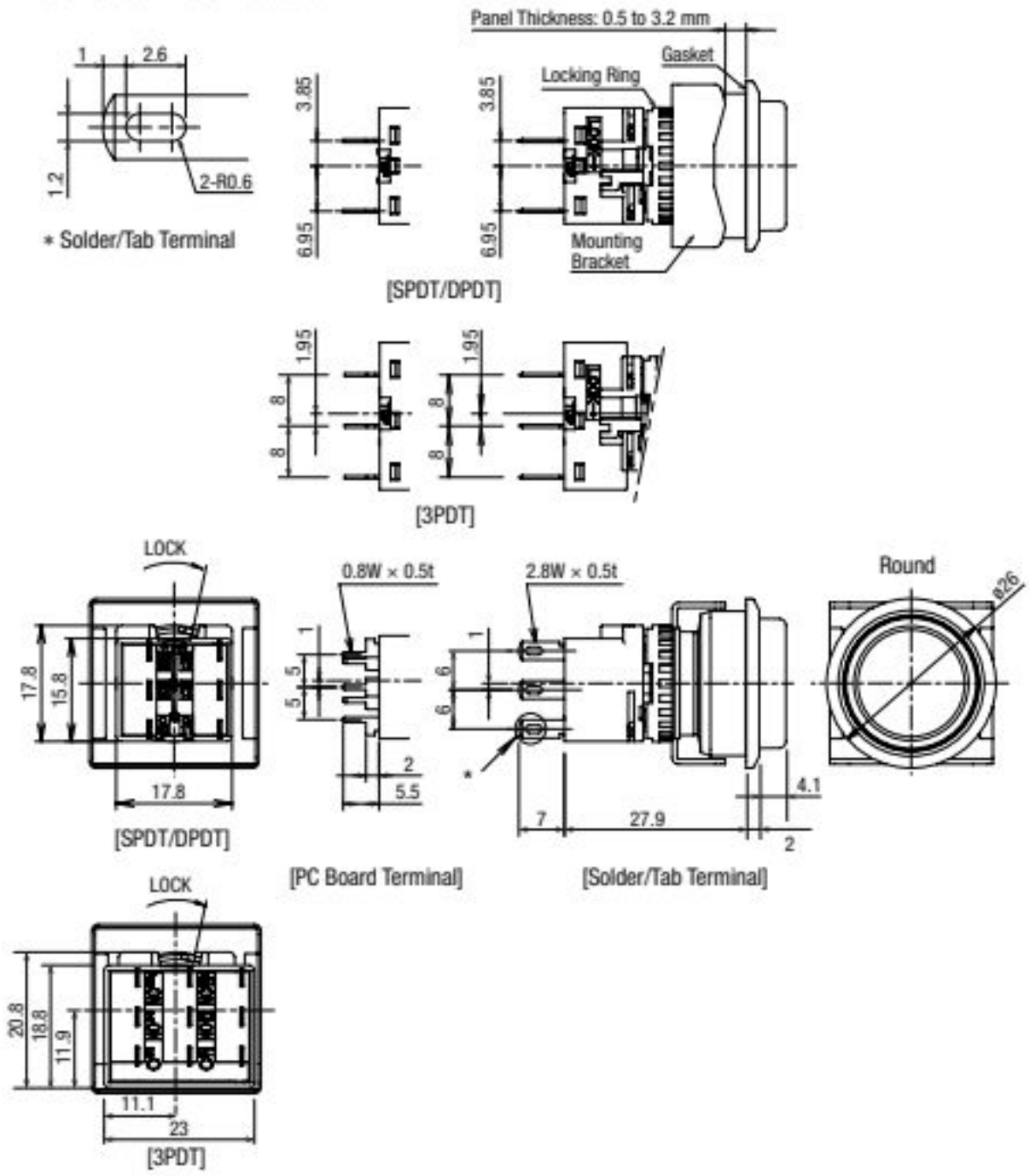

Terminal Arrangement (Bottom View)

SPDT/DPDT Contacts

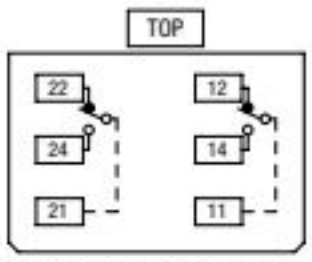

(SPDT contacts on the right only)

3PDT Contacts

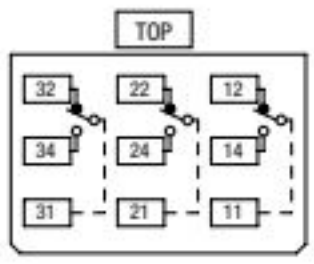

- For details on mounting hole layout, see B-120.
- For details on pc board and circuit design, see B-121.
- For details on single board mounting, see B-122.

Download catalogs and CAD from http://eu.idec.com/downloads

Flush Silhouette Switches LBW Series

Selector Switches

Solder/Tab Terminal

Package Quantity:1

Part No. / Shape: **LBW①S-②T③④**

Round / Black Bezel

Square / Black Bezel

Round / Metallic Bezel

Square / Metallic Bezel

① Shape	② Operator Position			③ Contact	Part No. Gold Contact	Part No. Silver Contact
Black bezel	90° 2-position	Maintained	L R	SPDT	LBW①S-2T1	LBW①S-2T5
				DPDT	LBW①S-2T2	LBW①S-2T6
				3PDT	LBW①S-2T3	LBW①S-2T7
	45° 3-position	Maintained	L C R	DPDT	LBW①S-3T2	LBW①S-3T6
				3PDT	LBW①S-3T3	LBW①S-3T7
		Spring return two-way	L C R	DPDT	LBW①S-33T2	LBW①S-33T6
				3PDT	LBW①S-33T3	LBW①S-33T7
Metallic bezel	90° 2-position	Maintained	L R	SPDT	LBW①S-2T1	LBW①S-2T5
				DPDT	LBW①S-2T2	LBW①S-2T6
				3PDT	LBW①S-2T3	LBW①S-2T7
	45° 3-position	Maintained	L C R	DPDT	LBW①S-3T2	LBW①S-3T6
				3PDT	LBW①S-3T3	LBW①S-3T7
		Spring return two-way	L C R	DPDT	LBW①S-33T2	LBW①S-33T6
				DPDT	LBW①S-33T3	LBW①S-33T7

- PC board terminals available for gold contacts. To specify, see Part Number Development below.
- For contact operation, see B-119.
- Other bezel sizes available (LB series). For details, see B-081.

Part Number Development

LBW①S-②T③④

① Shape

Code	Shape
6	Round / Black Bezel
7	Square / Black Bezel
6M	Round / Metallic Bezel
7M	Square / Metallic Bezel

② Operator Position

2-position

Operator Position
2 Maintained (L R)

3-position

Operator Position	
3 Maintained (L C R)	33 Spring return two-way (L C R)

③ Contacts

Code	Contact
1	Gold/SPDT (90° 2-position only)
2	Gold/DPDT
3	Gold/3PDT
5	Silver/SPDT (90° 2-position only)
6	Silver/DPDT
7	Silver/3PDT

④ Others

Code	Specification	Part No. Example
Blank	Solder/Tab Terminal	—
V	PC Board Terminal (Gold Contact Only)	LBW6S-2T1V

For more information, visit http://eu.idec.com

Dimensions

All dimensions in mm.

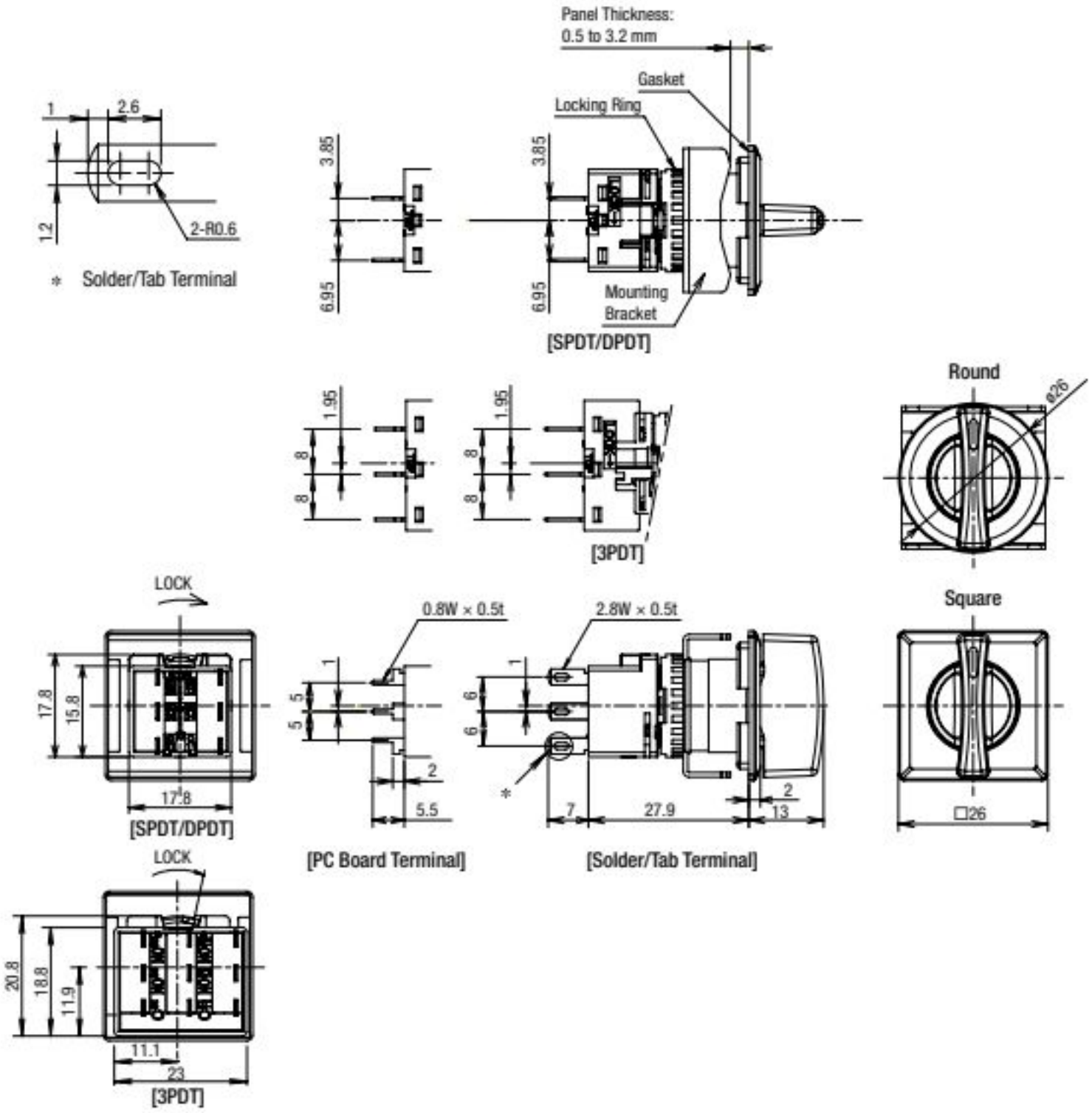

Terminal Arrangement (Bottom View)

SPDT/DPDT Contacts

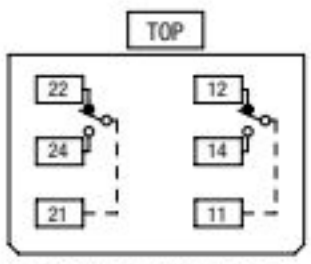

(SPDT contacts on the right only)

3PDT Contacts

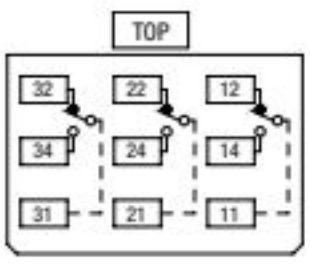

Panel Cut-out for Positioning

Round (LBW6S/LBW6MS)

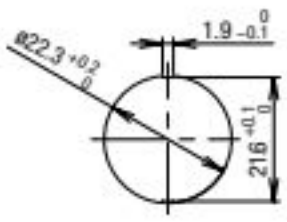

Mounting Hole Layout

Round (LBW6S/LBW6MS)

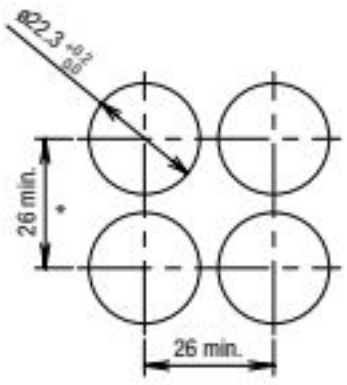

Square (LBW7S/LBW7MS)

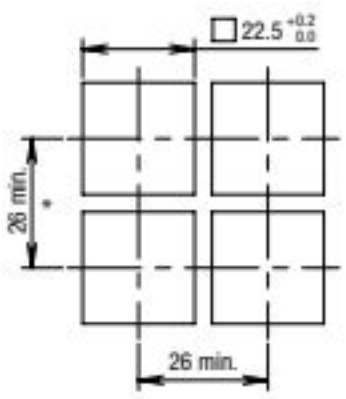

- For details on pc board and circuit design, see B-121.
- For details on single board mounting, see B-122.

Download catalogs and CAD from http://eu.idec.com/downloads

Flush Silhouette Switches LBW Series

Key Selector Switches

Solder/Tab Terminal

Package Quantity:1

Part No. / Shape: LBW①K-②③T④⑤-⑥

Wave Key

Round / Black Bezel

Square / Black Bezel

Round / Metallic Bezel

Square / Metallic Bezel

Disc Tumbler Key

Round /Metallic Bezel

Square / Metallic Bezel

① Shape	② Operator Position		⑤ Key Removable Position	⑤ Contact	Part No. Gold Contact	Part No. Silver Contact
Black bezel	90° 2-position	Maintained	A: Key removable in all positions (Ⓛ Ⓡ)	SPDT	LBW①K-2ST1A	LBW①K-2ST5A
				DPDT	LBW①K-2ST2A	LBW①K-2ST6A
				3PDT	LBW①K-2ST3A	LBW①K-2ST7A
	45° 3-position	Maintained	A: Key removable in all positions (Ⓛ Ⓒ Ⓡ)	DPDT	LBW①K-3ST2A	LBW①K-3ST6A
				3PDT	LBW①K-3ST3A	LBW①K-3ST7A
Metallic bezel	90° 2-position	Maintained	A: Key removable in all positions (Ⓛ Ⓡ)	SPDT	LBW①K-2ST1A	LBW①K-2ST5A
				DPDT	LBW①K-2ST2A	LBW①K-2ST6A
				3PDT	LBW①K-2ST3A	LBW①K-2ST7A
	45° 3-position	Maintained	A: Key removable in all positions (Ⓛ Ⓒ Ⓡ)	DPDT	LBW①K-3ST2A	LBW①K-3ST6A
				3PDT	LBW①K-3ST3A	LBW①K-3ST7A

- For operator position, see Part Number Development below.
- For key removable position. see Part Number Development below. The key cannot be removed at the return position.
- Two keys are supplied.
- Besides the standard key (key number 0H), six other keys are available.
- Disc tumbler keys also available. Only the standard key is available. To specify, see Part Number Development below.
- PC board terminals available for gold contacts. To specify, see Part Number Development below.
- For contact operation, see B-119.
- Other bezel sizes available (LB series). For details, see B-085.

Part Number Development

LBW①K-②③T④⑤-⑥

① Shape

Code	Shape
6	Round / Black Bezel
7	Square / Black Bezel
6M	Round / Metallic Bezel
7M	Square / Metallic Bezel

② Operator Position

Code	Operator Position
2	90° 2-position maintained
3	45° 3-position maintained
33	45°-3-position spring return two-way

③ Key Style

Code	Key Style
S	Wave key
Blank	Disc tumbler key

④ Contacts

Code	Contact
1	Gold/SPDT (90° 2-position only)
2	Gold/DPDT
3	Gold/3PDT
5	Silver/SPDT (90° 2-position only)
6	Silver/DPDT
7	Silver/3PDT

⑤ Key Removal Position

The key cannot be removed at the return position.

2-position

Key Removable Position	
A: Key removable in all positions (Ⓛ Ⓡ)	B: Key removable at left (Ⓛ ❶)

3-position

Key Removable Position	
A: Key removable in all positions (Ⓛ Ⓒ Ⓡ)	D: Key removable at center (❶ Ⓒ ❶)

3-position

Spring return two-way
(❶ C ❶)

- Key is removable at Ⓛ, Ⓒ, Ⓡ.
  Key is retained at ❶, ❶, and ❶.

⑥ Key Number

Code	
0H	Standard key
1H to 2H	Reversible key
3H to 6H	Non-reversible key

- Wave keys only.

Others

Code	Specification	Part No. Example
Blank	Solder/Tab Terminal	—
V	PC Board Terminal (Gold Contact Only)	LBW6K-2T1VA

For more information, visit http://eu.idec.com

Dimensions

All dimensions in mm.

Key Selector Switches with Wave Key

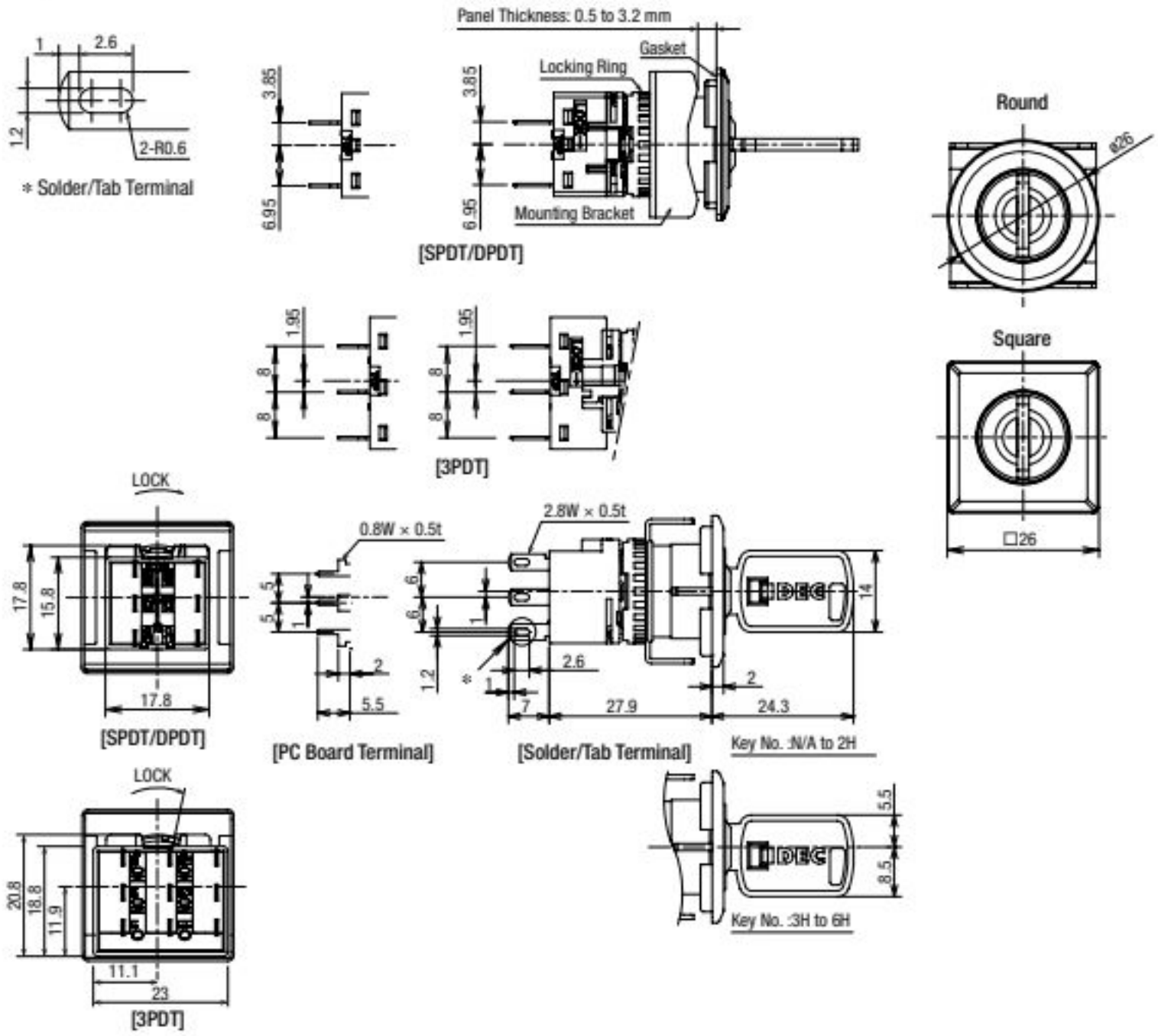

Key Selector Switches with Disc Tumbler Key

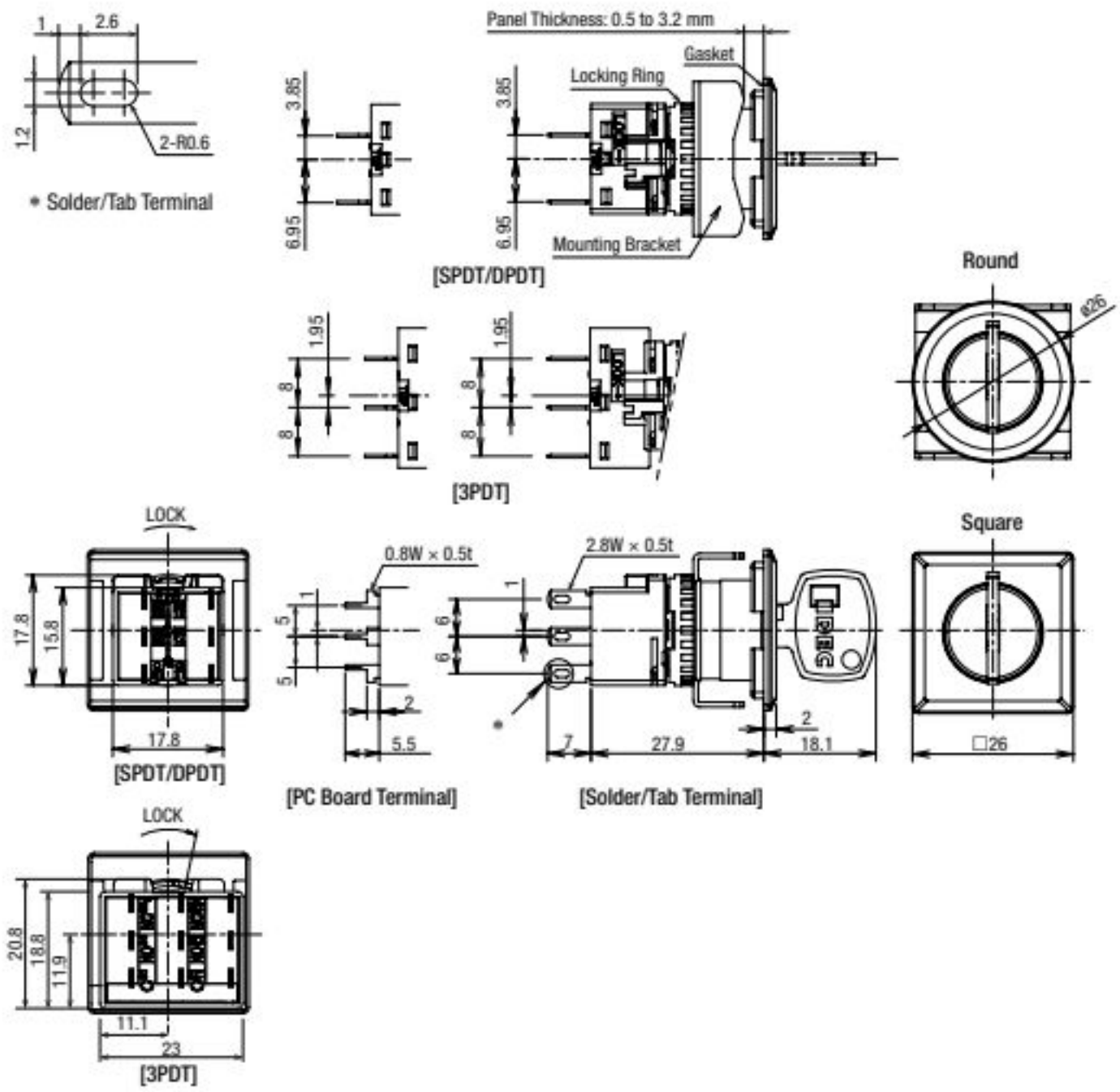

Terminal Arrangement (Bottom View)

SPDT/DPDT Contacts

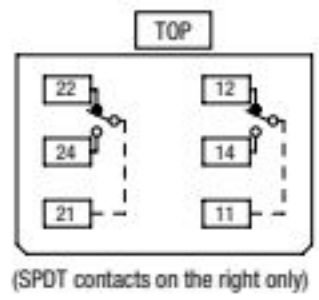

(SPDT contacts on the right only)

3PDT Contacts

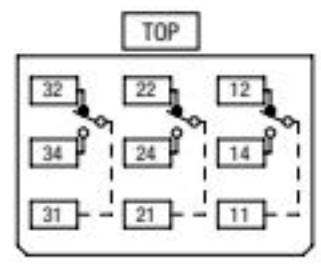

- For details on mounting hole layout, see B-120.
- For details on pc board and circuit design, see B-121.
- For details on single board mounting, see B-122.

Download catalogs and CAD from http://eu.idec.com/downloads

ø16 LB-SERIES

Miniature Switches and Pilot Lights
(Standard Bezel)

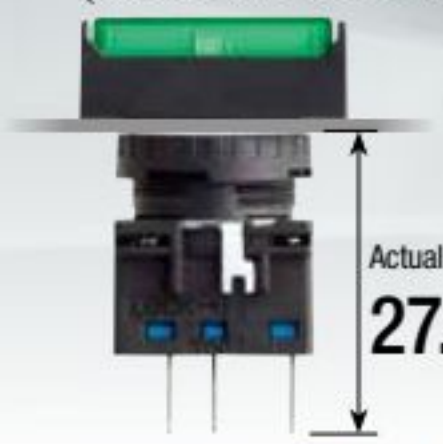

Short
Shortest in the industry (as of February 2011)

Panel depth of only 27.9mm.
Removable contact blocks ideal for single board mounting.
Protection degree: IP65 (IEC 60529)

point For space-saving installation

* Panel cutout (mm)

Round ø16.2* | Square □16.2* | Rectangular 16.2×24*

Illuminated Pushbuttons

Pushbuttons

Marking plates can be used with lens style pushbuttons

*Does not light on.

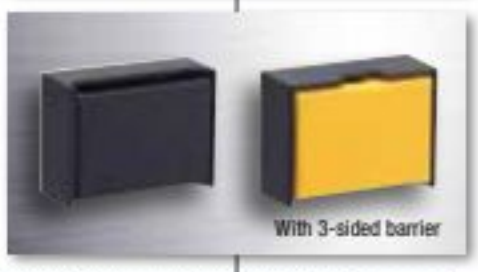

Pilot Lights

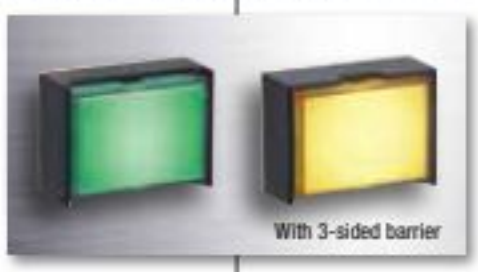

Dome Pilot Lights

Selector Switches

2- and 3-position selector switches.
Maintained and other various spring return actions available.

*Photo: knob operator (lever operator also available)

Illuminated selector switches available

Key Selectors ensure safety

Wave Key

Seven different keys to choose from.
Key removable in desired positions.

Buzzers

Steady sound at 80 dB minimum (at 0.1m)
IP54 tab terminals, PC board terminal, and IP40 solder terminals available.

Lever Switches

Degree of protection: IP67
Up/down operation.
2- and 3-positions available.
For 3-position switches, maintained and return two-way actions available.

Illuminated Pushbutton Color Variations »

Pushbutton Color Variations »

For more information, visit http://eu.idec.com

APEM
Switches & Pilot Lights
Control Boxes
Emergency Stop Switches
Enabling Switches
Safety Products
Explosion Proof
Terminal Blocks
Relays & Sockets
Circuit Protectors
Power Supplies
LED Illumination
Controllers
Operator Interfaces
Sensors
AUTO-ID
Flush Silhouette
ø16
ø22
ø30
Miniature
Pilot Lights
LB
A6

ø16mm LB Series Switches and Pilot Lights

Panel depth of only 27.9mm.
Removable contact blocks ideal for single board mounting.

Contact Ratings

Gold Contact (switch base: blue)

Rated Insulation Voltage		250V	
Rated Thermal Current		3A	
Rated Operating Voltage		30V DC	125V AC
Rated Operating Current (electrical life: 100,000 operations)	Resistive Load	0.1A	0.1A
Contact Material		Gold plated silver	

- Minimum applicable load (reference value): 5V AC/DC, 1 mA
  Applicable range is subject to the operating conditions and load.
- See electrical life in Specifications.

Silver Contact (switch base: gray)

Rated Insulation Voltage				250V		
Rated Operating Voltage				30V	125V	250V
Rated Operating Current	Electrical Life 50,000 operations	AC 50/60Hz	Resistive load	—	5A	5A
			Inductive load	—	3A	1.5A
		DC	Resistive load	5A	1.1A	—
			Inductive load	2A	0.4A	—
	Electrical Life 100,000 operations	AC 50/60Hz	Resistive load	—	5A	3A
			Inductive load	—	3A	1.5A
		DC	Resistive load	3A	0.6A	—
			Inductive load	1A	0.22A	—
Rated Thermal Current				5A		
Contact Material				Silver		

- AC inductive load: PF=0.6 to 0.7 DC inductive load: L/R=7 ms max.

LED Ratings

Rated Voltage	5V DC	12V AC/DC	24V AC/DC
Voltage Range	5V DC±5%	12V AC/DC ±10%	24V AC/DC ±10%
LED Part No.	LB9Z-LED5②	LB9Z-LED1②	LB9Z-LED2②
Current Draw	5 mA (typ.)		
Voltage Marking	Marked on the side of the LED unit		
LED Life (reference value)	Approx. 30,000 hours [until the brightness reduces to 50% of the initial value when lit at the rated voltage (direct current) under 25°C environment.]		
Internal Circuit	A, G, R, PW, S, W		

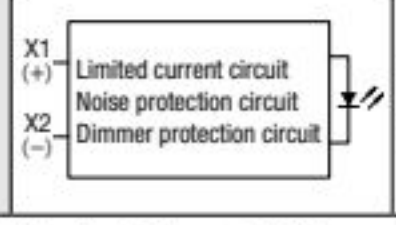

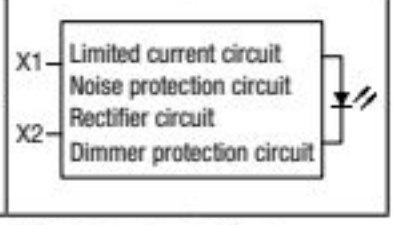

- ② (color code): A (amber), G (green), PW (pure white), R (red), S (blue)
- Use the pure white (PW) module for yellow illumination.
- LED lamp contains a current-limiting resistor.

Specifications

Operating Temperature		–25 to +60°C (no freezing) Illuminated units: –25 to +55°C
Storage Temperature		–30 to +80°C (no freezing)
Operating Humidity		45 to 85% RH (no condensation)
Contact Resistance		50 mΩ maximum (initial value)
Insulation Resistance		100 MΩ minimum (500V DC megger)
Dielectric Strength	Switch Unit	Between live part and ground: 2,000V AC, 1 minute Between terminals of different poles: 2,000V AC, 1 minute Between terminals of the same poles: 1,000V AC, 1 minute
	Illumination Unit	Between live part and ground: 2,000V AC, 1 minute
Vibration Resistance		Operating extremes/Damage limits: 5 to 55 Hz, amplitude 0.5 mm
Shock Resistance		Operating extremes: 100 m/s² Damage limits: 1,000 m/s²
Mechanical Life (minimum operations)		Momentary: 2,000,000 Maintained: 250,000 Selector switches: 250,000 Key selector switches: 250,000
Electrical Life (minimum operations)		Momentary: 50,000 / 100,000 (*1) Maintained: 50,000 / 100,000 (*2) Selector switches: 50,000 / 100,000 (*2) Key selector switches: 50,000 / 100,000 (*2)
Degree of Protection		IP65 (IEC 60529)
Terminal Style		Solder/tab terminal #110 PC board terminal
Weight (approx.)		11g (LB3L-M1T24) 10g (LB3P-1T04) 10g (LB3B-M1T2) 12g (LB3S-2T2) 25g (LB3K-2ST2A)

*1: Switching frequency 1,800 operations/h.
*2: Switching frequency 1,200 operations/h.

Download catalogs and CAD from http://eu.idec.com/downloads

ø16mm LB Series Switches and Pilot Lights

Illuminated Pushbuttons

Solder/Tab Terminal

Package Quantity:1

Part No. / Shape: LB①L-②1T③④⑤∗

Round | Square | Rectangular | Rectangular with 3-sided Barrier

② Operation	③ Contact	④ LED Operating Voltage	Part No. Gold Contact	Part No. Silver Contact	∗ Illumination Color Code
Momentary	SPDT	24V AC/DC	LB①L-M1T14∗	LB①L-M1T54∗	Specify the color code in place of ∗ in the Part No. A: amber G: green PW: pure white R: red S: blue Y: yellow
	DPDT		LB①L-M1T24∗	LB①L-M1T64∗	
Maintained	SPDT	24V AC/DC	LB①L-A1T14∗	LB①L-A1T54∗	
	DPDT		LB①L-A1T24∗	LB①L-A1T64∗	

- Illuminated pushbuttons contain an LED unit. For details on LED units, see B-130.
- Illuminated pushbuttons can be used with legend markings. Engraving can be done on a marking plate which is placed in the lens, or a clear film can be printed and placed in the lens. See B-133 for details on the marking plate and film.
- PC board terminals available for gold contacts. To specify, see Part Number Development below.
- 5V DC and 12V AC/DC LED operating voltages also available. To specify, see Part Number Development below.

Part Number Development

LB①L-②1T③④⑤∗

① Shape

Code	Shape
1	Round
2	Square
3	Rectangular
4	Rectangular with 3-sided Barrier

② Operation

Code	Operation
A	Maintained
M	Momentary

③ Contacts

Code	Contact
1	Gold/SPDT
2	Gold/DPDT
5	Silver/SPDT
6	Silver/DPDT

④ LED Operating Voltage

Code	Rated Operating Voltage
1	5V DC
3	12V AC/DC
4	24V AC/DC

⑤ Others

Code	Specification	Part No. Example
Blank	Solder/Tab Terminal	—
V	PC Board Terminal (Gold Contact Only)	LB1L-M1T14V∗

- Specify the color code in place of ∗ in the table above

For more information, visit http://eu.idec.com

Dimensions

All dimensions in mm.

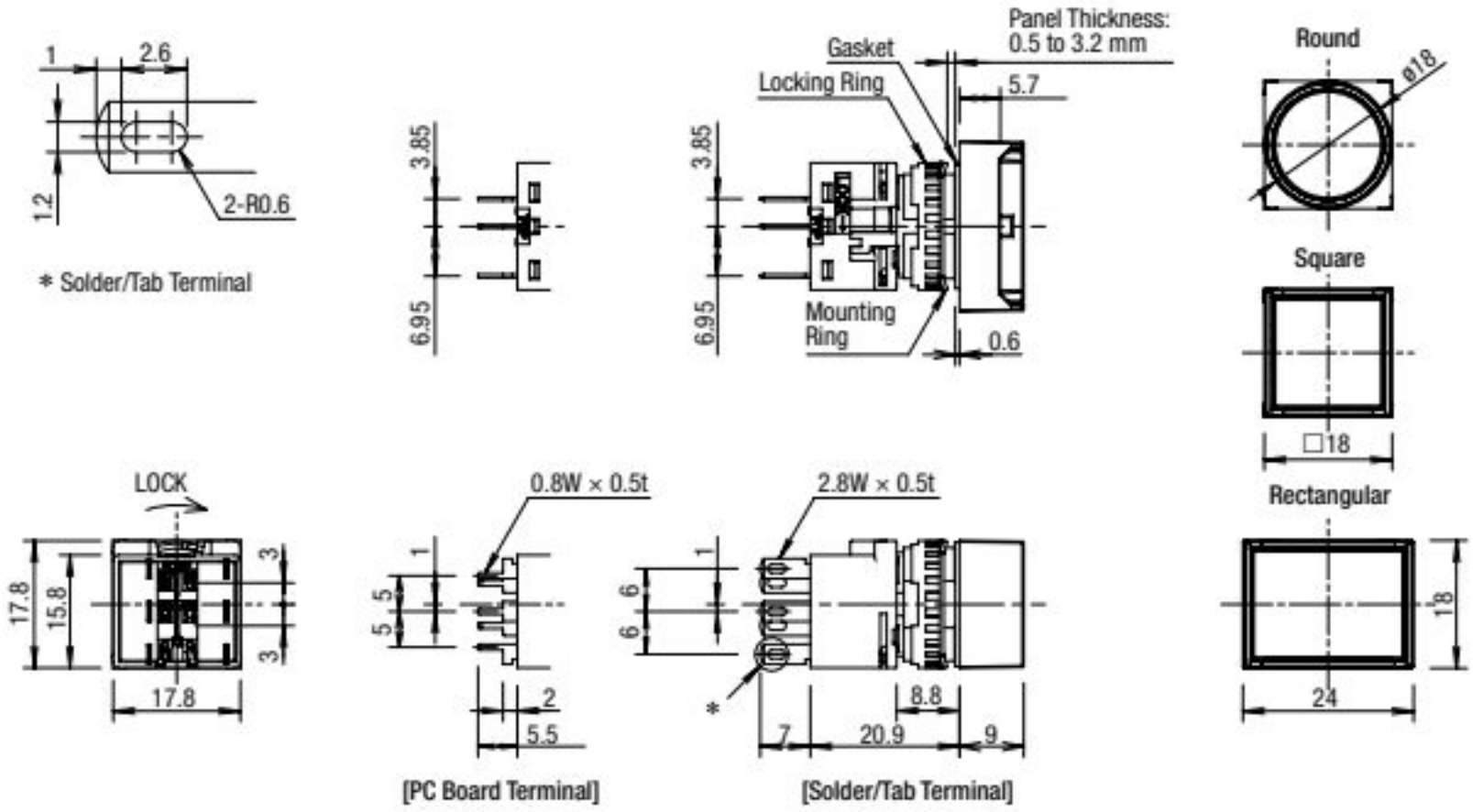

Terminal Arrangement (Bottom View)

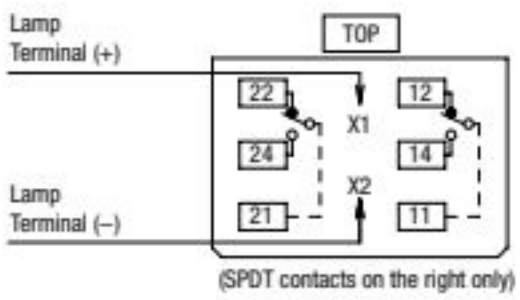

Panel Cut-out for Positioning

(LB1L/LB2L/LB3L/LB4L)

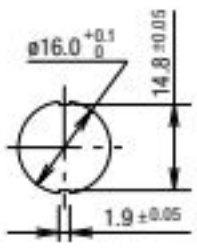

Mounting Hole Layout

(LB1L/LB2L/LB3L/LB4L)

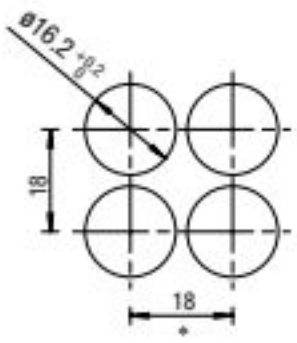

*: 24 mm for rectangular units.

Note: When using rubber boot or terminal cover, see dimensions on B-127 and B-128.

- For details on pc board and circuit design, see B-121.
- For details on single board mounting, see B-122.

Download catalogs and CAD from http://eu.idec.com/downloads

ø16mm LB Series Switches and Pilot Lights

Pilot Lights

Solder/Tab Terminal

Package Quantity:1

Part No. / Shape	LB①P-②T0③④＊

Round | Square | Rectangular | Rectangular with 3-sided Barrier | Dome

② Lens Shape	③ LED Operating Voltage	Part No.	＊ Illumination Color Code
Flush	24V AC/DC	LB①P-1T04＊	Specify the color code in place of ＊ in the Part No. A: amber G: green PW: pure white R: red S: blue Y: yellow
Dome	24V AC/DC	LB1P-2T04＊	

- Pilot lights contain an LED unit. For maintenance LED units see B-130.
- Legends and symbols can be engraved on a marking plate or film to be inserted under the lens by users for labelling purposes. See B-133 for details.
- PC board terminals available. To specify, see Part Number Development below.
- 5V DC and 12V AC/DC LED operating voltages also available. To specify, see Part Number Development below.

Part Number Development

LB①P-②T0③④＊

① Shape

Code	Shape
1	Round
2	Square
3	Rectangular
4	Rectangular with 3-sided Barrier

- Round only for dome.

② Lens Shape

Code	Lens Shape
1	Flush
2	Dome

③ LED Operating Voltage

Code	Rated Operating Voltage
1	5V DC
3	12V AC/DC
4	24V AC/DC

④ Others

Code	Specification	Part No. Example
Blank	Solder/Tab Terminal	—
V	PC Board Terminal	LB1P-1T04V＊

- Specify the color code in place of ＊ in the table above

APEM
Switches & Pilot Lights
Control Boxes
Emergency Stop Switches
Enabling Switches
Safety Products
Explosion Proof
Terminal Blocks
Relays & Sockets
Circuit Protectors
Power Supplies
LED Illumination
Controllers
Operator Interfaces
Sensors
AUTO-ID
Flush Silhouette
ø16
ø22
ø30
Miniature
Pilot Lights
LB
A6

For more information, visit http://eu.idec.com

Dimensions

All dimensions in mm.

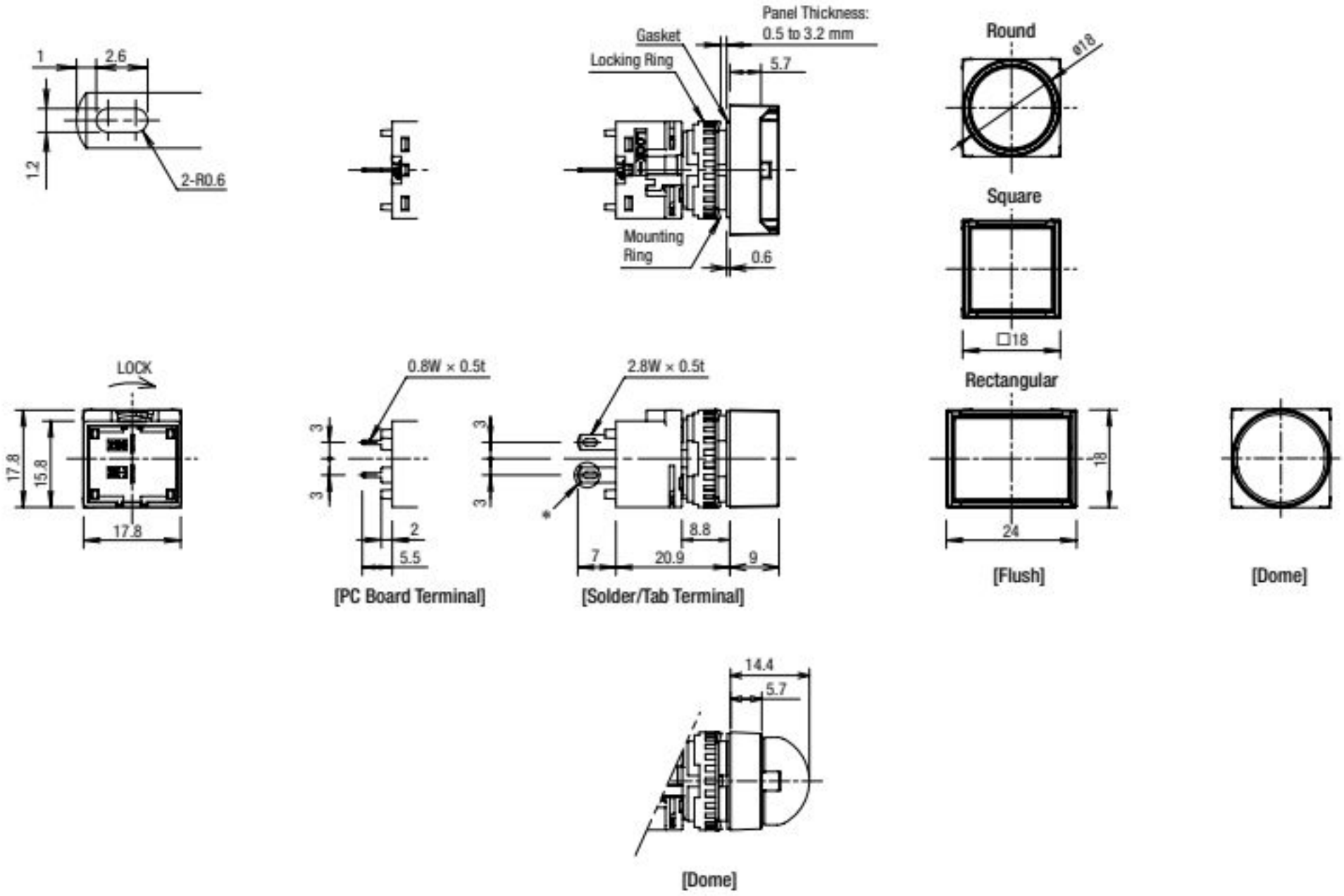

Terminal Arrangement (Bottom View)

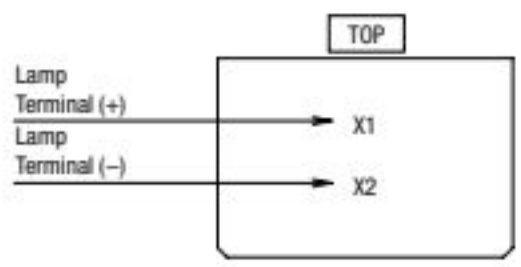

Panel Cut-out for Positioning

(LB1P/LB2P/LB3P/LB4P)

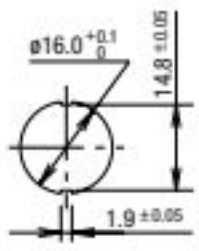

Mounting Hole Layout

(LB1P/LB2P/LB3P/LB4P)

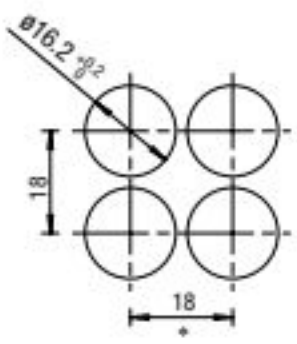

*: 24 mm for rectangular units.

Note: When using rubber boot or terminal cover, see dimensions on B-127 and B-128.

- For details on pc board and circuit design, see B-121.
- For details on single board mounting, see B-122.

Download catalogs and CAD from http://eu.idec.com/downloads

ø16mm LB Series Switches and Pilot Lights

Pushbuttons

Solder/Tab Terminal

Package Quantity:1

Part No. / Shape: LB①B-②1T③④*

Round

Square

Rectangular

Rectangular with 3-sided Barrier

Button Style	② Operation	③ Contact	Part No. Gold Contact	Part No. Silver Contact	* Illumination Color Code
Button	Momentary	SPDT	LB①B-M1T1*	LB①B-M1T5*	B: black G: green R: red S: blue W: white Y: yellow
		DPDT	LB①B-M1T2*	LB①B-M1T6*	
		3PDT	LB①B-M1T3*	LB①B-M1T7*	
	Maintained	SPDT	LB①B-A1T1*	LB①B-A1T5*	
		DPDT	LB①B-A1T2*	LB①B-A1T6*	
		3PDT	LB①B-A1T3*	LB①B-A1T7*	
Lens	Momentary	SPDT	LB①B-M1T1L*	LB①B-M1T5L*	A: amber G: green R: red S: blue W: white Y: yellow
		DPDT	LB①B-M1T2L*	LB①B-M1T6L*	
		3PDT	LB①B-M1T3L*	LB①B-M1T7L*	
	Maintained	SPDT	LB①B-A1T1L*	LB①B-A1T5L*	
		DPDT	LB①B-A1T2L*	LB①B-A1T6L*	
		3PDT	LB①B-A1T3L*	LB①B-A1T7L*	

- Lens can be used with legend markings. Engraving can be done on a marking plate which is placed in the lens, or a clear film can be printed and placed in the lens. See B-133 for details on the marking plate and film.
- Black is available for lens. Black lens consists of a transparent lens and a black marking plate. To specify, see Part Number Development below.
- PC board terminals available for gold contacts. To specify, see Part Number Development below.

Part Number Development

LB①B-②1T③④*

① Shape

Code	Shape
1	Round
2	Square
3	Rectangular
4	Rectangular with 3-sided Barrier

② Operation

Code	Operation
A	Maintained
M	Momentary

③ Contacts

Code	Contact
1	Gold/SPDT
2	Gold/DPDT
3	Gold/3PDT
5	Silver/SPDT
6	Silver/DPDT
7	Silver/3PDT

④ Others

Code	Specification	Part No. Example
Blank	Solder/Tab Terminal	—
B	Black Translucent Lens (Lens Only)	LB1B-M1T1LB
V	PC Board Terminal (Gold Contact Only)	LB1B-M1T1V*

For more information, visit http://eu.idec.com

Dimensions

All dimensions in mm.

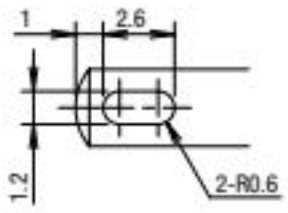

* Solder/Tab Terminal

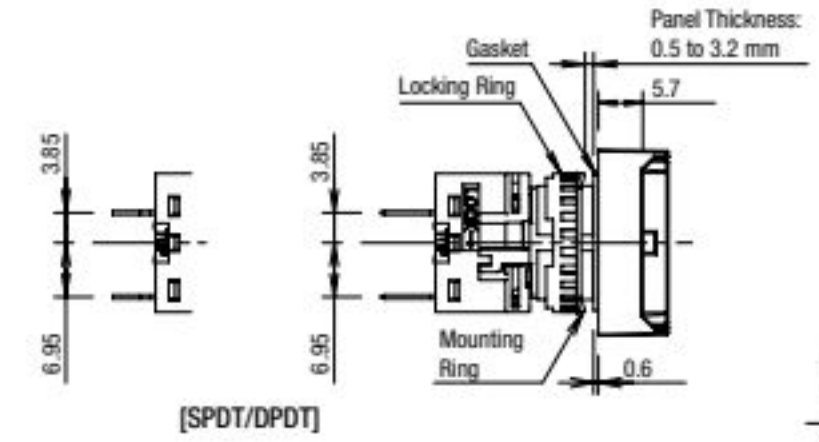

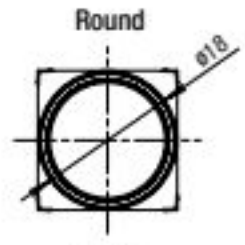

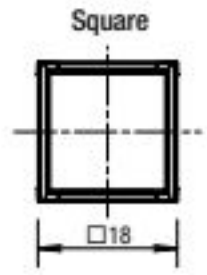

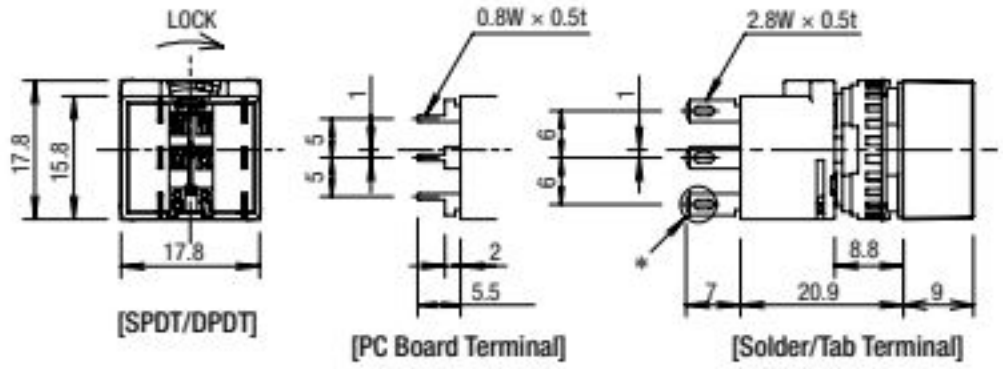

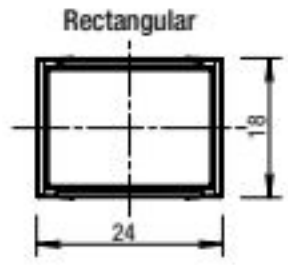

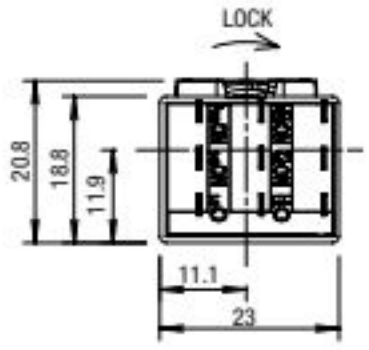

[3PDT]

Terminal Arrangement (Bottom View)

SPDT/DPDT Contacts

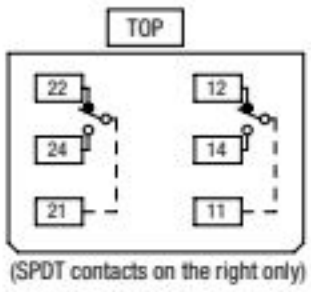

(SPDT contacts on the right only)

3PDT Contacts

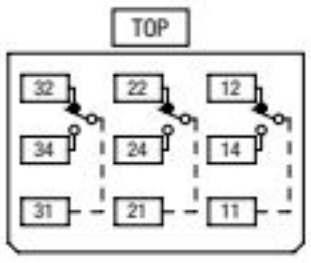

Mounting Hole Layout

(LB1B/LB2B/LB3B/LB4B)

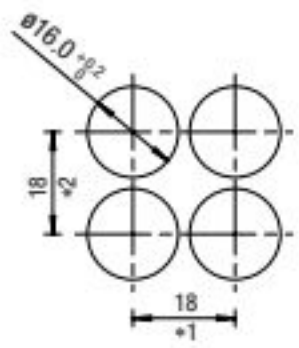

*1: 24 mm for rectangular units, 23.2 mm for 3PDT
*2: 21 mm for 3PDT

Note: When using rubber boot or terminal cover, see dimensions on B-127 and B-128.

Panel Cut-out for Positioning

(LB1B/LB2B/LB3B/LB4B)

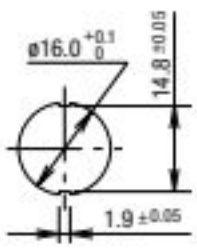

- For details on pc board and circuit design, see B-121.
- For details on single board mounting, see B-122.

Download catalogs and CAD from http://eu.idec.com/downloads

ø16mm LB Series Switches and Pilot Lights

Selector Switches

Solder/Tab Terminal

Package Quantity:1

Part No. / Shape: LB①S-②③T④⑤

Knob Operator

Round

Square

Rectangular

Lever Operator

Round

Square

Rectangular

② Operator Position		③ Contact	Part No. Gold Contact	Part No. Silver Contact
90° 2-position	Maintained (L R)	SPDT	LB①S-2T1	LB①S-2T5
		DPDT	LB①S-2T2	LB①S-2T6
		3PDT	LB①S-2T3	LB①S-2T7
45° 3-position	Maintained (L C R)	DPDT	LB①S-3T2	LB①S-3T6
		3PDT	LB①S-3T3	LB①S-3T7
	Spring return two-way (L C R)	DPDT	LB①S-33T2	LB①S-33T6
		3PDT	LB①S-33T3	LB①S-33T7

- Lever operators also available. To specify, see Part Number Development below.
- PC board terminals available for gold contacts. To specify, see Part Number Development below.
- 2-position spring return from right, 3-position spring return from right, 3-position spring return from left also available. To specify, see Part Number Development below.
- For contact operation, see B-119.

Part Number Development

LB①S-②③T④⑤

① Shape

Code	Shape
1	Round
2	Square
3	Rectangular

② Operator Position

2-position

Operator Position	
2 Maintained	21 Spring return from right

3-position

Operator Position			
3 Maintained	31 Spring return from right	32 Spring return from left	33 Spring return two-way

③ Operator

Code	Operator Shape
Blank	Knob
L	Lever

④ Contacts

Code	Contact
1	Gold/SPDT (90° 2-position only)
2	Gold/DPDT
3	Gold/3PDT
5	Silver/SPDT (90° 2-position only)
6	Silver/DPDT
7	Silver/3PDT

⑤ Others

Code	Specification	Part No. Example
Blank	Solder/Tab Terminal	—
V	PC Board Terminal (Gold Contact Only)	LB1S-2T1V

For more information, visit http://eu.idec.com

Dimensions

All dimensions in mm.

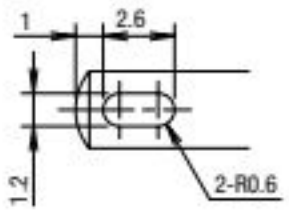

* Solder/Tab Terminal

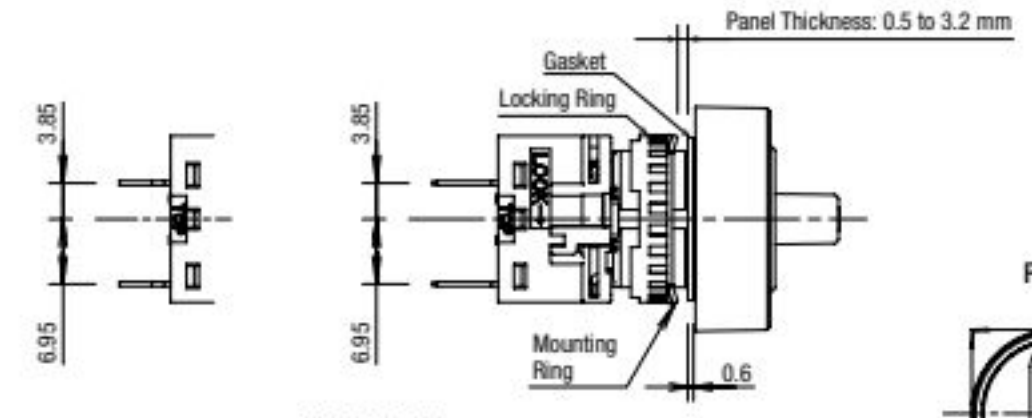

[SPDT/DPDT]

[3PDT]

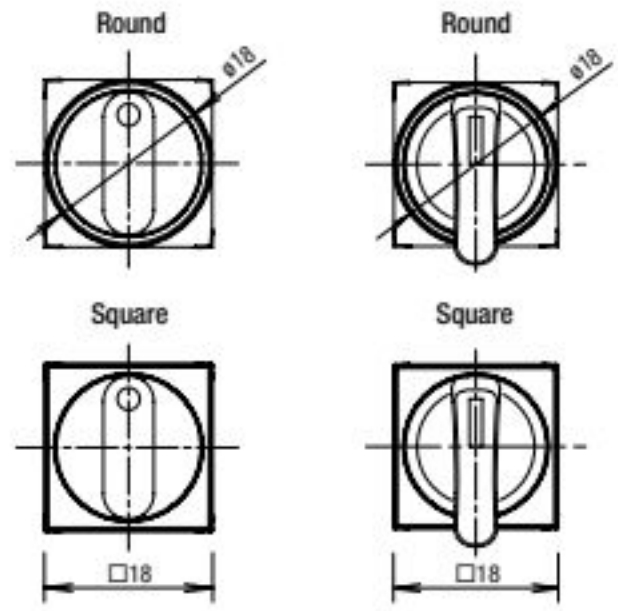

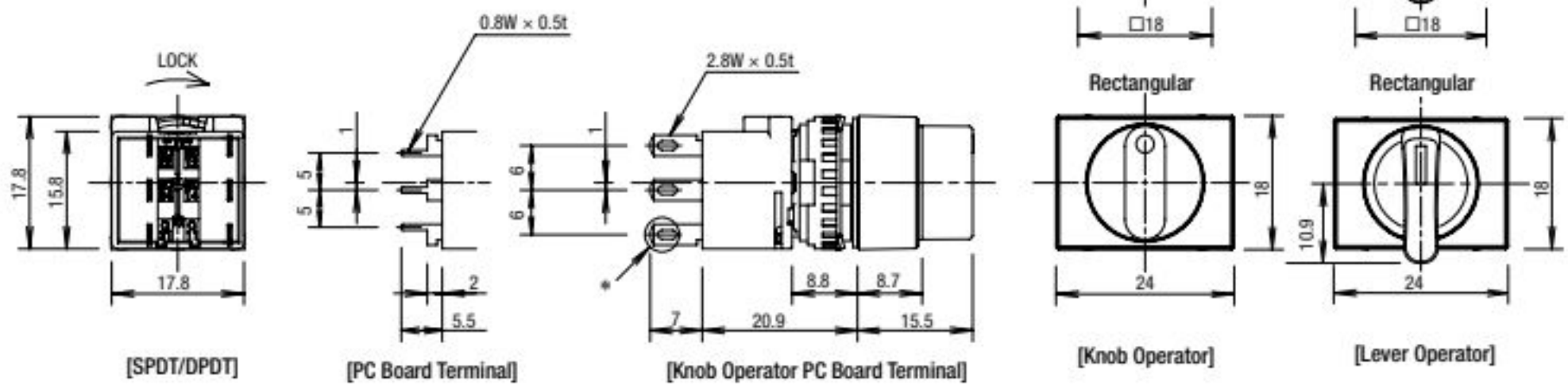

[SPDT/DPDT]

[PC Board Terminal]

[Knob Operator PC Board Terminal]

[Knob Operator]

[Lever Operator]

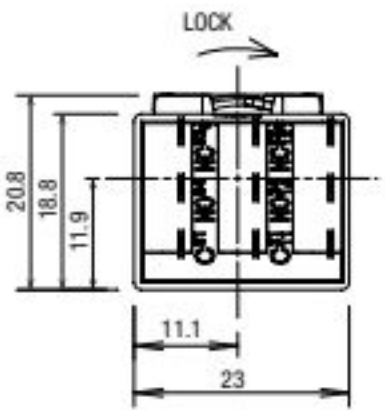

[3PDT]

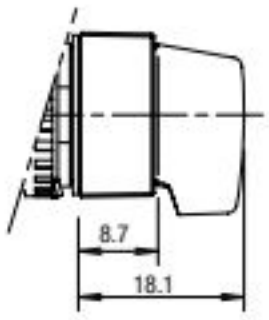

[Lever Operator]

Terminal Arrangement (Bottom View)

SPDT/DPDT Contacts

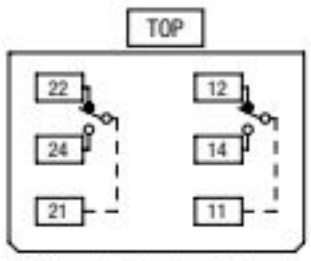

(SPDT contacts on the right only)

3PDT Contacts

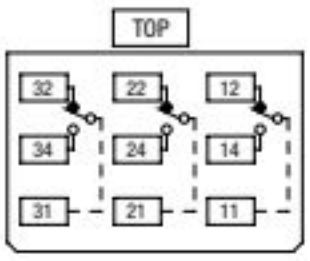

Mounting Hole Layout

(LB1S/LB2S/LB3S)

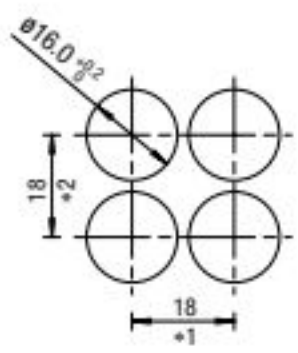

*1: 24 mm for rectangular units, 23.2 mm for 3PDT
*2: 21 mm for 3PDT
Note: When using terminal cover, see dimensions on B-128.

Panel Cut-out for Positioning

(LB1S/LB2S/LB3S)

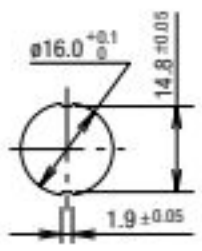

- For details on pc board and circuit design, see B-121.
- For details on single board mounting, see B-122.

Download catalogs and CAD from http://eu.idec.com/downloads

ø16mm LB Series Switches and Pilot Lights

Illuminated Selector Switches

Solder/Tab Terminal

Package Quantity:1

Part No. / Shape	LB①F-②T③④⑤＊

Round

Square

Rectangular

② Operator Position		③ Contact	④ LED Operating Voltage	Part No. Gold Contact	Part No. Silver Contact	＊ Illumination Color Code
90° 2-position	Maintained L R	SPDT	24V AC/DC	LB①F-2T14＊	LB①F-2T54＊	Specify the color code in place of ＊ in the Part No. G: green R: red PW: pure white
		DPDT	24V AC/DC	LB①F-2T24＊	LB①F-2T64＊	
45° 3-position	Maintained L C R	DPDT	24V AC/DC	LB①F-3T24＊	LB①F-3T64＊	

- Illuminated selector switches contain an LED unit. For maintenance LED units see B-130.
- PC board terminals available for gold contacts. To specify, see Part Number Development below.
- 5V DC and 12V AC/DC LED operating voltages also available. To specify, see Part Number Development below.
- For contact operation, see B-119.

Part Number Development

LB①F-②T③④⑤＊

① Shape

Code	Shape
1	Round
2	Square
3	Rectangular

② Operator Position

2-position 3-position

Operator Position	
2 Maintained	3 Maintained
L R	L C R

③ Contacts

Code	Contact
1	Gold/SPDT (90° 2-position only)
2	Gold/DPDT
5	Silver/SPDT (90° 2-position only)
6	Silver/DPDT

④ LED Operating Voltage

Code	Rated Operating Voltage
1	5V DC
3	12V AC/DC
4	24V AC/DC

⑤ Others

Code	Specification	Part No. Example
Blank	Solder/Tab Terminal	—
V	PC Board Terminal (Gold Contact Only)	LB1F-2T14V＊

- Specify a color code in place of * in the Part No.

APEM
Switches & Pilot Lights
Control Boxes
Emergency Stop Switches
Enabling Switches
Safety Products
Explosion Proof
Terminal Blocks
Relays & Sockets
Circuit Protectors
Power Supplies
LED Illumination
Controllers
Operator Interfaces
Sensors
AUTO-ID
Flush Silhouette
ø16
ø22
ø30
Miniature
Pilot Lights
LB
A6

For more information, visit http://eu.idec.com

Dimensions

All dimensions in mm.

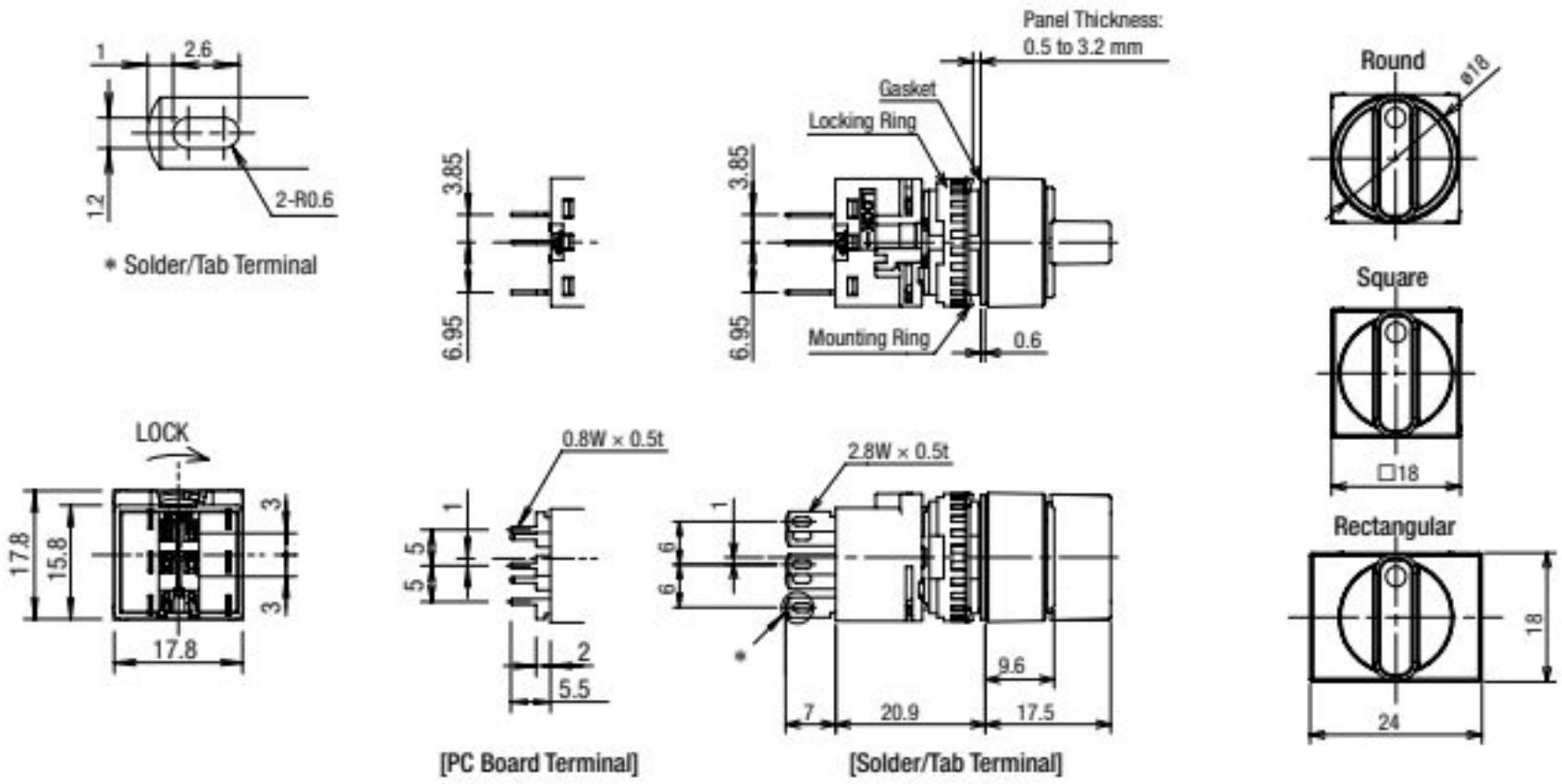

Terminal Arrangement (Bottom View)

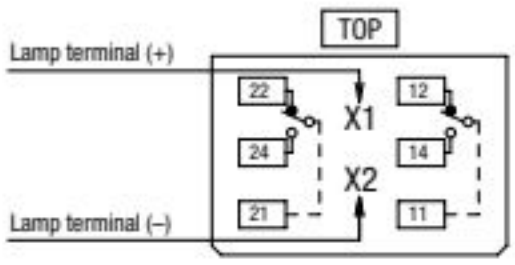

(SPDT contacts on the right only)

Panel Cut-out for Positioning

Round (LB1F/LB2F/LB3F)

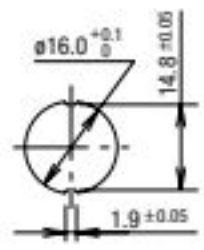

Mounting Hole Layout

Round (LB1F/LB2F/LB3F)

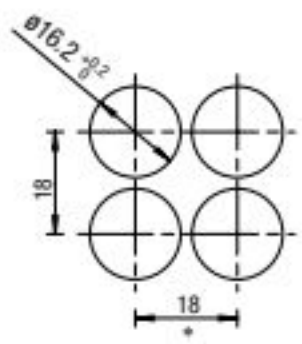

*: 24 mm for rectangular units.

Note: When using terminal cover, see dimensions on B-128

- For details on pc board and circuit design, see B-121.
- For details on single board mounting, see B-122.

Download catalogs and CAD from http://eu.idec.com/downloads

ø16mm LB Series Switches and Pilot Lights

Key Selector Switches

Solder/Tab Terminal

Package Quantity:1

Part No. / Shape: LB①K-②③T④⑤-⑥

Round

Square

Rectangular

② Operator Position		⑤ Key Removable Position	④ Contact	Part No. Gold Contact	Part No. Silver Contact
90° 2-position	Maintained	A: Key removable in all positions (L R)	SPDT	LB①K-2ST1A	LB①K-2ST5A
			DPDT	LB①K-2ST2A	LB①K-2ST6A
			3PDT	LB①K-2ST3A	LB①K-2ST7A
45° 3-position	Maintained	A: Key removable in all positions (L C R)	DPDT	LB①K-3ST2A	LB①K-3ST6A
			3PDT	LB①K-3ST3A	LB①K-3ST7A

- For operator position, see Part Number Development below.
- For key removable position, see Part Number Development below. The key cannot be removed at the return position.
- Two keys are supplied.
- Besides the standard key (key number 0H), six other keys are available.
- Disc tumbler keys also available. Only the standard key is available. To specify, see Part Number Development below.
- PC board terminals available for gold contacts. To specify, see Part Number Development below.
- For contact operation, see B-119.

Part Number Development

LB①K-②③T④⑤-⑥

① Shape

Code	Shape
1	Round
2	Square
3	Rectangular

② Operator Position

Code	Operator Position
2	90° 2-position maintained
21	90° 2-position spring return from right
3	45° 3-position maintained
31	45° 3-position spring return from right
32	45° 3-position spring return from left
33	45°-3-position spring return two-way

③ Key Style

Code	Key Style
S	Wave key
Blank	Disc tumbler key

④ Contacts

Code	Contact
1	Gold/SPDT (90° 2-position only)
2	Gold/DPDT
3	Gold/3PDT
5	Silver/SPDT (90° 2-position only)
6	Silver/DPDT
7	Silver/3PDT

⑤ Key Removal Position

2-position

Key Removable Position			Spring return from right
A: Key removable in all positions (L R)	B: Key removable at left (L ● R)	C: Key removable at right (● L R)	(L ● R)

3-position

Key Removable Position			
A: Key removable in all positions (L C R)	B: Key removable at left / center (L C ● R)	C: Key removable at center / right (● L C R)	D: Key removable at center (● L C ● R)
E: Key removable at right / left (L ● C R)	G: Key removable at left (L ● C ● R)	H: Key removable at right (● L ● C R)	

For key selectors with the following operations, the key cannot be removed at the return position.

3-position

Spring return from right	Spring return from left	Spring return two-way
(L C ● R)	(● L C R)	(● L C ● R)

- Key is removable at Ⓛ, Ⓒ, Ⓡ. Key is retained at ●, ●, and ●.

⑥ Key Number

Code	
Blank	Standard key (0H)
1H to 2H	Reversible key
3H to 6H	Non-reversible key

- Wave key only.

Others

Code	Specification	Part No. Example
Blank	Solder/Tab Terminal	—
V	PC Board Terminal (Gold Contact Only)	LB1K-2ST1VA

APEM
Switches & Pilot Lights
Control Boxes
Emergency Stop Switches
Enabling Switches
Safety Products
Explosion Proof
Terminal Blocks
Relays & Sockets
Circuit Protectors
Power Supplies
LED Illumination
Controllers
Operator Interfaces
Sensors
AUTO-ID
Flush Silhouette
ø16
ø22
ø30
Miniature
Pilot Lights
LB
A6

For more information, visit http://eu.idec.com

Dimensions

All dimensions in mm.

Key Selector Switches with Wave Key

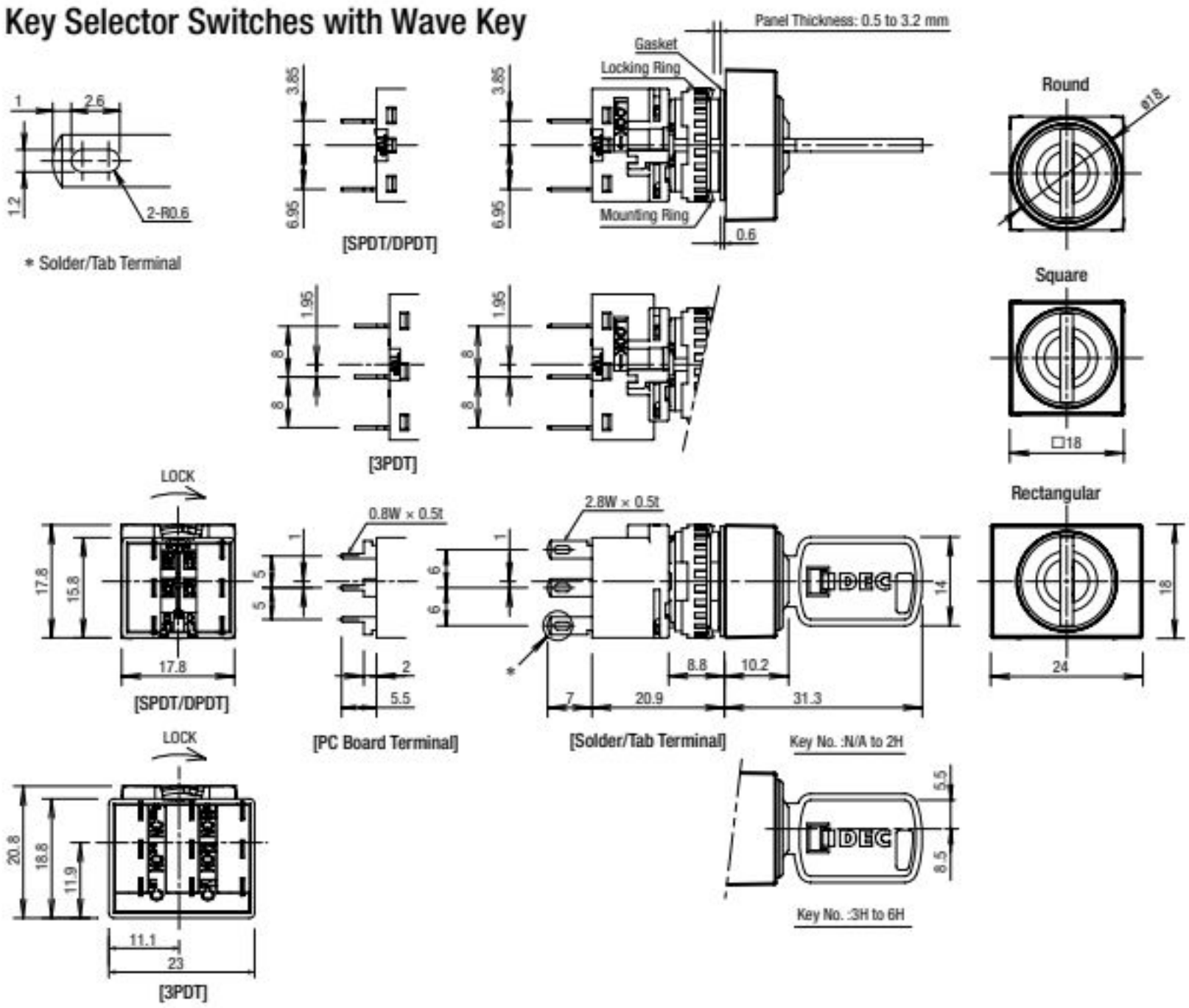

Key Selector Switches with Disc Tumbler Key

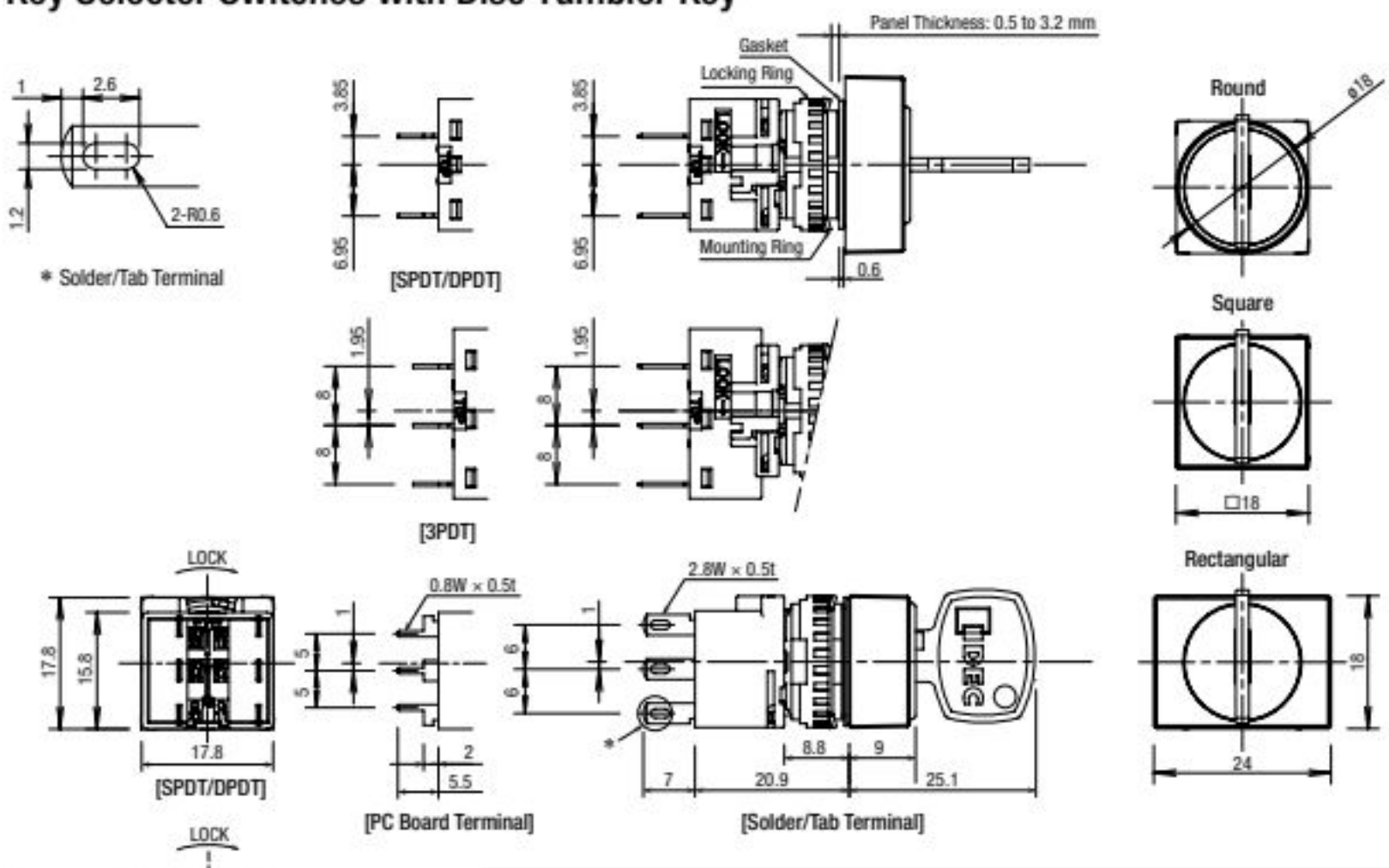

Terminal Arrangement (Bottom View)

SPDT/DPDT Contacts

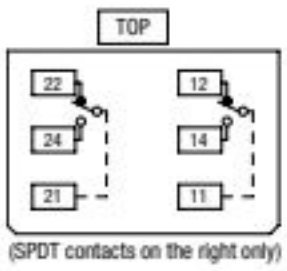

(SPDT contacts on the right only)

3PDT Contacts

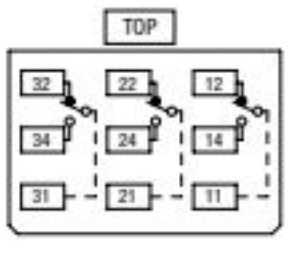

- For details on mounting hole layout, see B-110.
- For details on pc board and circuit design, see B-121.
- For details on single board mounting, see B-122.

Download catalogs and CAD from http://eu.idec.com/downloads

APEM
Switches & Pilot Lights
Control Boxes
Emergency Stop Switches
Enabling Switches
Safety Products
Explosion Proof
Terminal Blocks
Relays & Sockets
Circuit Protectors
Power Supplies
LED Illumination
Controllers
Operator Interfaces
Sensors
AUTO-ID
Flush Silhouette
ø16
ø22
ø30
Miniature
Pilot Lights
LB
A6

ø16mm LB Series Switches and Pilot Lights

Lever Switches

Solder/Tab Terminal

Package Quantity:1

Part No. / Shape

Round

Operator Position			Contact	Part No. Gold Contact	Part No. Silver Contact
2-position	Maintained	U D	SPDT	LB1T-2T1	LB1T-2T5
			DPDT	LB1T-2T2	LB1T-2T6
			3PDT	LB1T-2T3	LB1T-2T7
3-position	Maintained	U C D	DPDT	LB1T-3T2	LB1T-3T6
			3PDT	LB1T-3T3	LB1T-3T7
	Spring return from top/bottom	U C D	DPDT	LB1T-33T2	LB1T-33T6
			3PDT	LB1T-33T3	LB1T-33T7

- PC board terminals available for gold contacts. Add "V" to the Part No.
  Example: **LB1T-2T1V**
- For contact operation, see B-119.

Dimensions

All dimensions in mm.

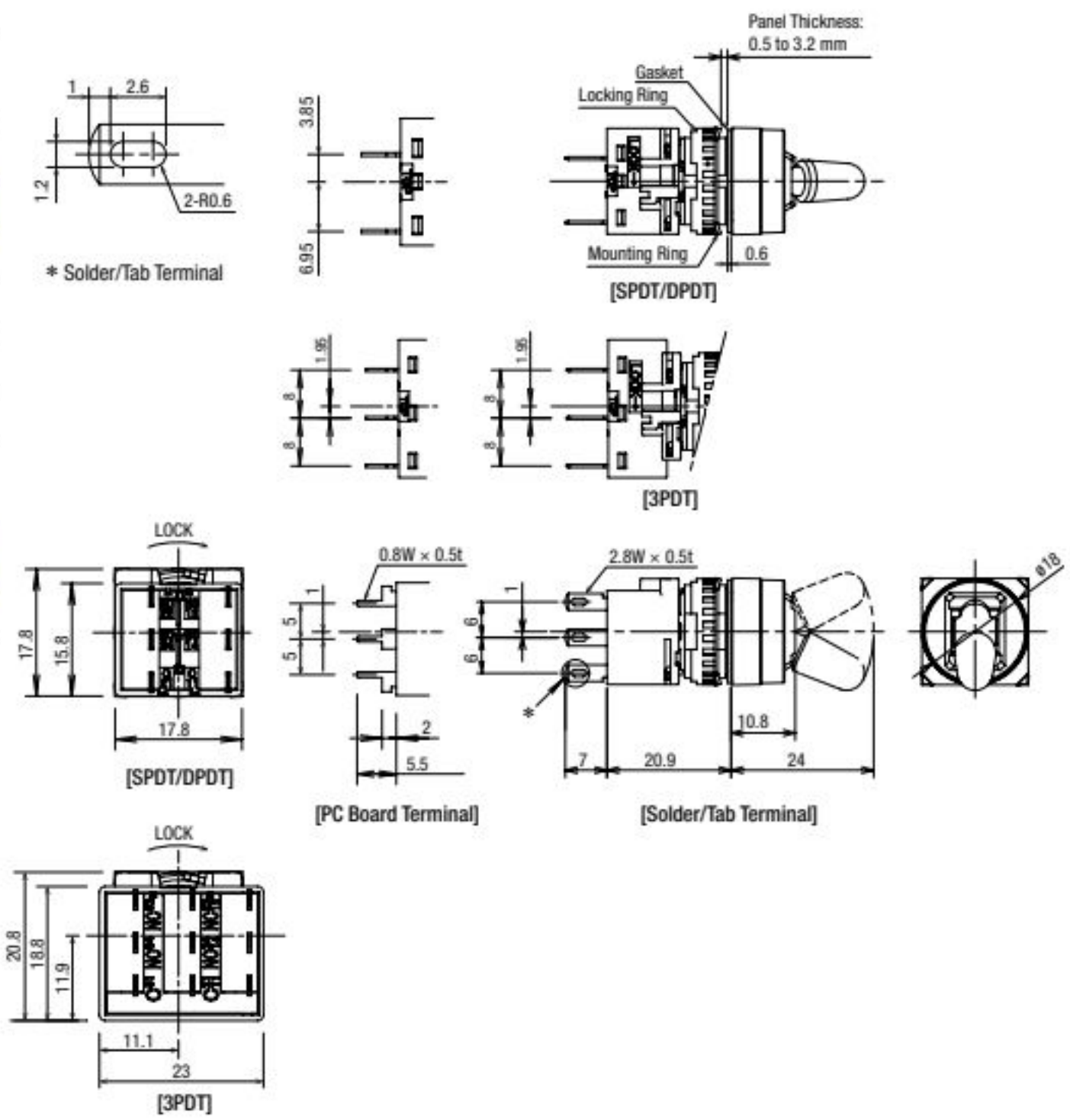

Terminal Arrangement (Bottom View)

SPDT/DPDT Contacts

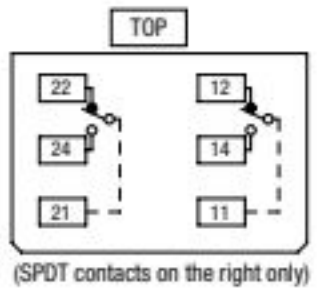

(SPDT contacts on the right only)

3PDT Contacts

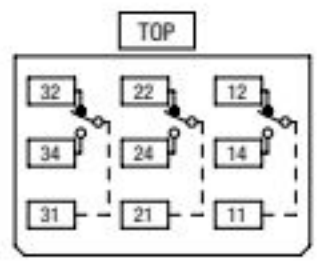

- For details on mounting hole layout, see B-110.
- For details on pc board and circuit design, see B-121.
- For details on single board mounting, see B-122.

For more information, visit http://eu.idec.com

Buzzers

Specifications

Rated Insulation Voltage	30V
Rated Operating Voltage	12, 24V DC
Operating Voltage Range	12V DC±10%, 24V DC±10%
Current Draw	26mA
Inrush Current	80mA maximum
Sound Pressure (at 0.1m)	Steady sound: 80 dB minimum (at the rated voltage)
Sound Frequency	2.3±0.3kHz
Response Speed	50 ms maximum
Operating Temperature	–25 to +60°C (no freezing)
Storage Temperature	–30 to +80°C(no freezing)
Operating Humidity	45 to 85% (no condensation)
Insulation Resistance	100 MΩ minimum (500V DC megger)

Dielectric Strength	Between live and dead parts: 1,000V AC, 1 minute
Vibration Resistance	Operating extremes/Damage limits: 5 to 55 Hz, amplitude 0.5 mm
Shock Resistance	Operating extremes: 100m/s² Damage limits:1,000m/s²
Life	1,000 hours minimum (beep sound)
Degree of Protection	LB3Z-1T0∗: IP54 (IEC60529) LB3Z-104K: IP40 (IEC60529)
Terminal Style	LB3Z-1T0∗: Solder/tab terminal #110 PC board terminal LB3Z-104K: Solder terminal
Weight (approx.)	11g (LB3Z-1T0∗), 8g (LB3Z-104K)

• For applicable standards and UL, CSA ratings, see B-089.

Name and Shape	Operating Voltage	Terminal Style	Part No. IP54	Part No. IP40
Rectangular IP54 IP40	24V DC	Solder/tab terminal	LB3Z-1T04	—
		PC board terminal	LB3Z-1T04V	—
		Solder terminal	—	LB3Z-104K

• 12V DC operating voltages also available. Specify "**-1T04**" in place of "**-1T03**" in the Part No.
Example: **LB3Z-1T03**

Dimensions

IP54

Terminal Arrangement (Bottom View)

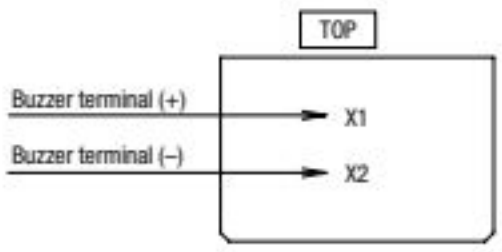

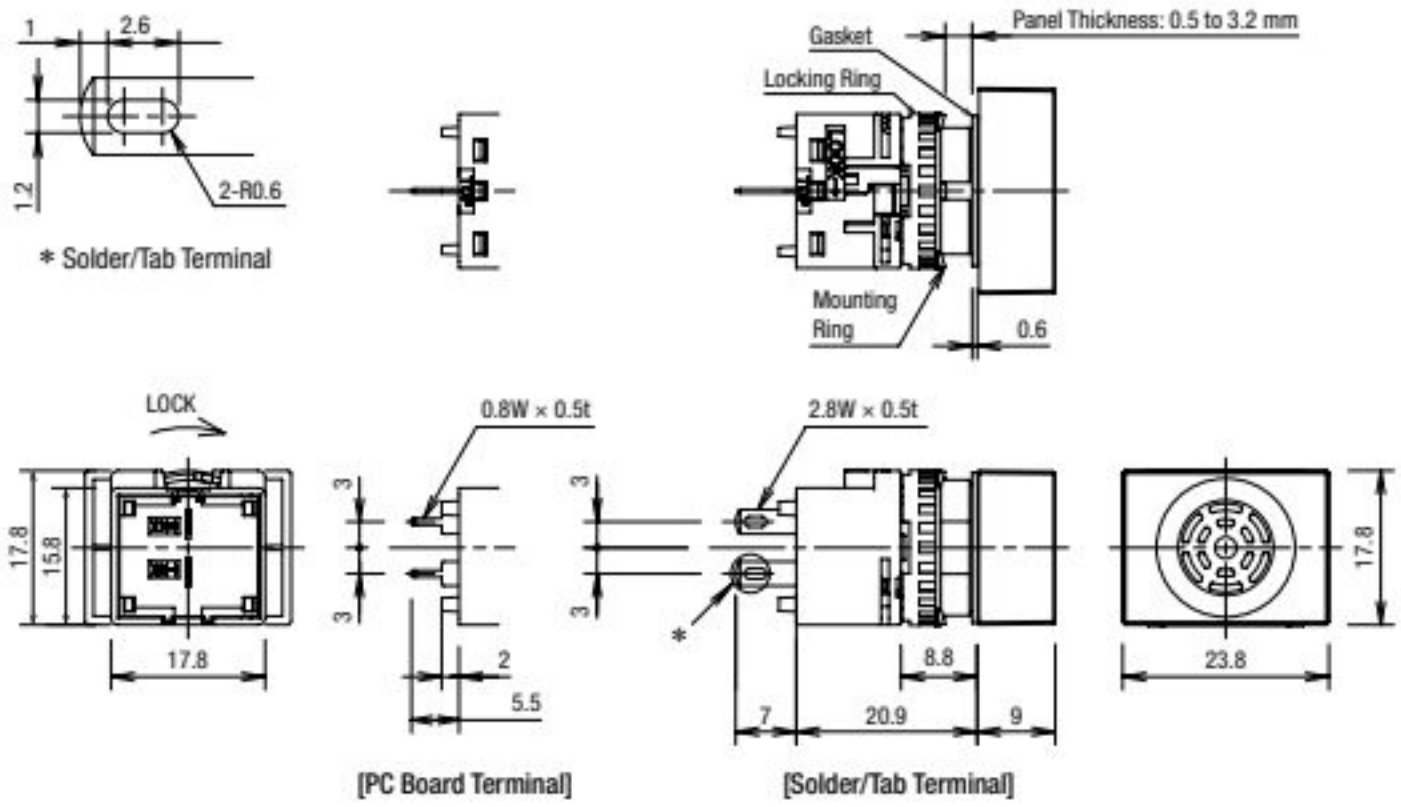

IP40

Terminal Arrangement (Bottom View)

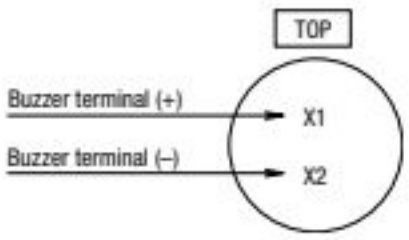

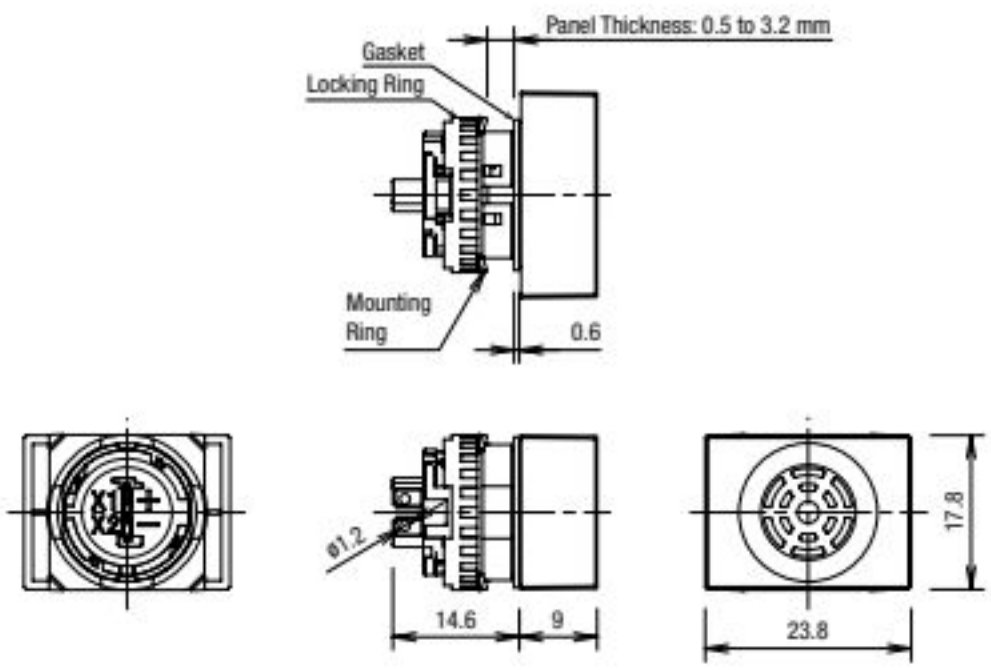

• For details on mounting hole layout, see B-110.
• For details on pc board and circuit design, see B-121.
• For details on single board mounting, see B-122.

All dimensions in mm.

Download catalogs and CAD from http://eu.idec.com/downloads

Contact Operation

Selector Switch / Illuminated Selector Switch / Key Selector Switch

Operator Position & Contact Operation (Top View)						
Position			Contact	Left	Center	Right
90° 2-position	Maintained	Spring return from right	SPDT			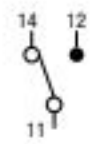
			DPDT	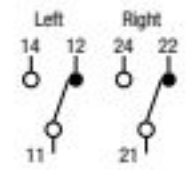		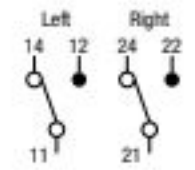
			3PDT	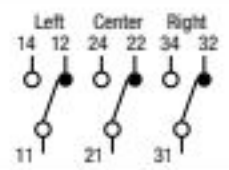		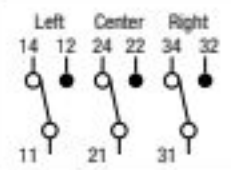
45° 3-position	Maintained	Spring return from right	DPDT	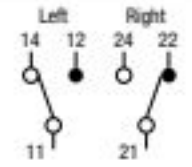	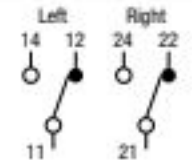	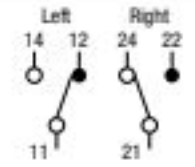
			3PDT	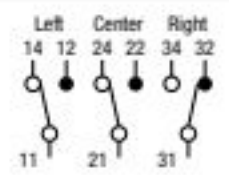	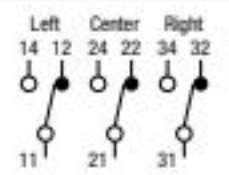	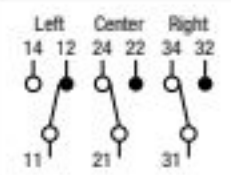

Spring return from left	Spring return two-way
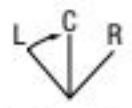	

Lever Switch

Lever Position & Contact Operation (Top View)						
Position			Contact	Down	Center	Up
90° 2-position	Maintained		SPDT			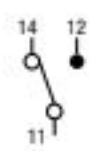
			DPDT	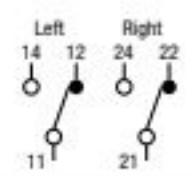		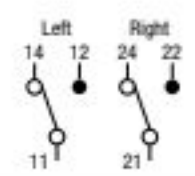
			3PDT	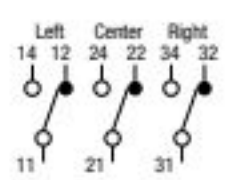		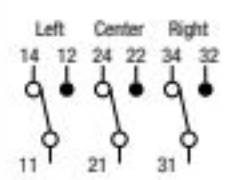
45° 3-position	Maintained	Spring return two-way	DPDT	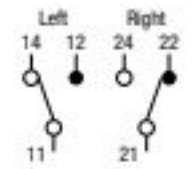	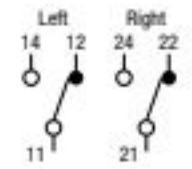	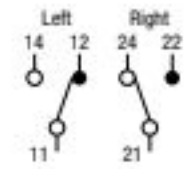
			3PDT	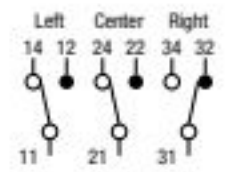	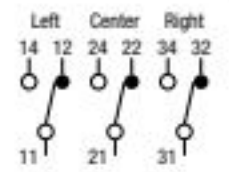	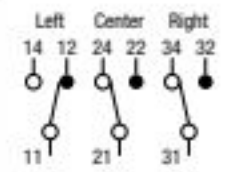

For more information, visit http://eu.idec.com

Mounting Hole Layout / PC Board Drilling Layout

LB Series Flush Bezel

Round (LB6/LB6M)

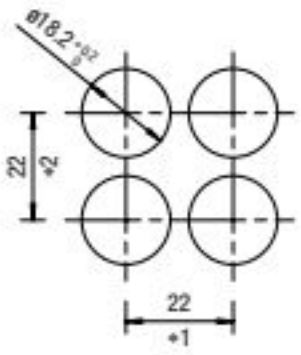

Square (LB7/LB7M)

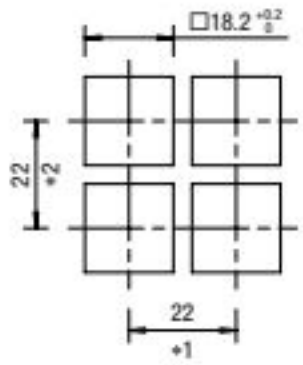

Rectangular (LB8/LB8M)

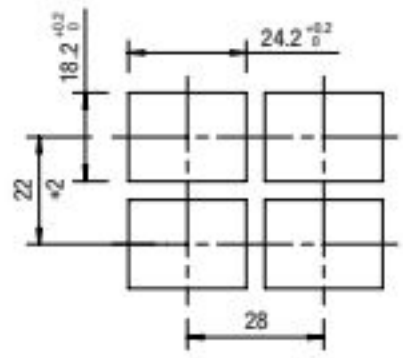

*1: 23.2 mm for 3PDT contacts
*2: 45 mm for switches with guard

Note: When using the LB series with a rubber boot or terminal cover, make sure to note the dimensions on B-128.

LBW Series Flush Bezel

Round (LBW6/LB6M/LBW6G)

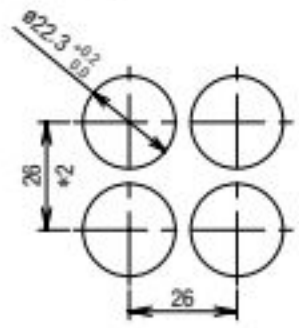

* 53 mm for switches with guard

Square (LBW7/LBW7M/LBW7G)

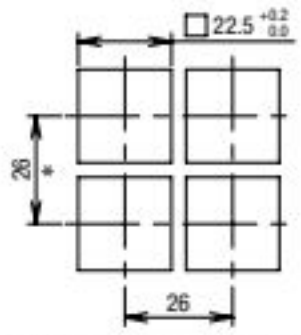

* 53 mm for switches with guard

LB Series Standard Bezel

(LB1/LB2/LB3)

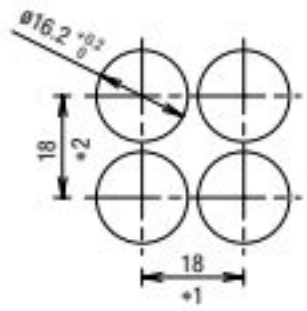

*1: 24 mm for rectangular type
23.2 mm for 3PDT contacts
*2: 21 mm for 3PDT contacts

Panel Cut-out for Positioning

LB Series Flush Bezel
Round (LB6/LB6M)

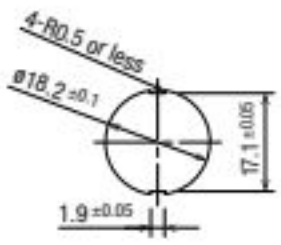

LBW Series Flush Bezel
Round (LBW6/LBW6M/LBW6G)

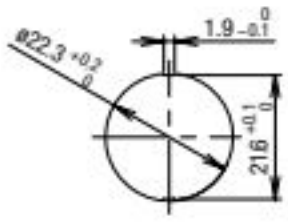

LB Series Standard Bezel
Round (LB1/LB2/LB3)

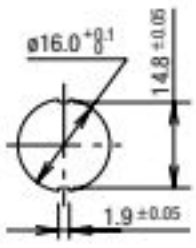

Approval Ratings and CCC Approval File No.

UL

Gold Contact

Rated Operating Voltage	30V DC	125V AC
Rated Operating Current	0.1A	0.1A

Silver Contact

Rated Operating Voltage			30V	125V	250V
Rated Operating Current	AC	Res.	—	3.5 A	2, 3, 5A
		Ind.	—	2A	1.5A
	DC	Res.	2, 3, 5A	0.4A	—
		Ind.	1A	0.2A	—

TÜV

Gold Contact

Rated Operating Voltage	30V DC	125V AC
Rated Operating Current	0.1A (DC-12)	0.1A (AC-12)

Silver Contact

Rated Operating Voltage		30V	125V	250V
Rated Operating Current	AC-12	—	3A	2, 5A
	DC-12	2, 5A	0.4A	—

CSA

Gold Contact

Rated Operating Voltage	30V DC	125V DC
Rated Operating Current	0.1A	0.1A

Silver Contact

Rated Operating Voltage			30V	125V	250V
Rated Operating Current	AC	Res.	—	3A	2, 3, 5A
		Ind.	—	2A	1.5A
	DC	Res.	2, 5A	0.4A	—
		Ind.	1A	0.2A	—

CCC

Gold Contact

Rated Operating Voltage	30V DC	125V AC
Rated Operating Current	0.1A (DC-12)	0.1A (AC-12)

Silver Contact

Rated Operating Voltage		30V	250V
Rated Operating Current	AC-12	—	2, 5A
	DC-12	2, 5A	—

Download catalogs and CAD from http://eu.idec.com/downloads

Notes for Designing PC Board and Circuit

All dimensions in mm.

- Use 1.6-mm-thick glass epoxy PC board with drilled holes.
- Design a circuit so that the LB/LBW series can operate within the rated voltage and current range. Make sure that inrush current and voltage do not exceed the rating.
- Minimum applicable load is 5V AC/DC, 1 mA on gold contacts. Applicable range is subject to the operating condition and load.
- Since the *2.8-mm-wide terminal touches the PC board as shown on the right, short circuit may occur with pattern lines. Design a circuit that prevents short circuits.

SPDT/DPDT Contacts

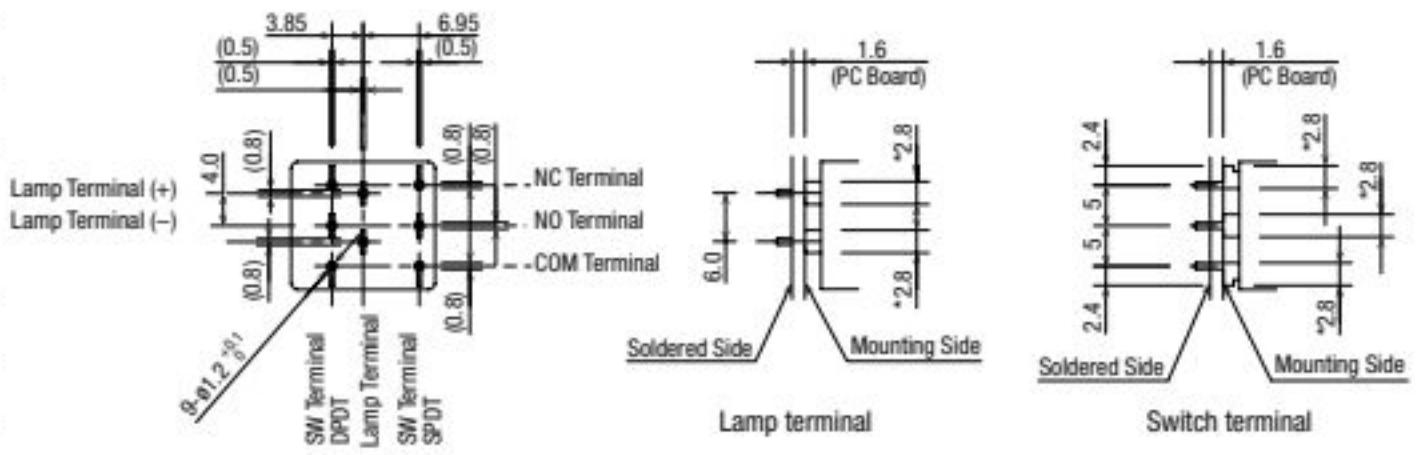

3PDT Contacts

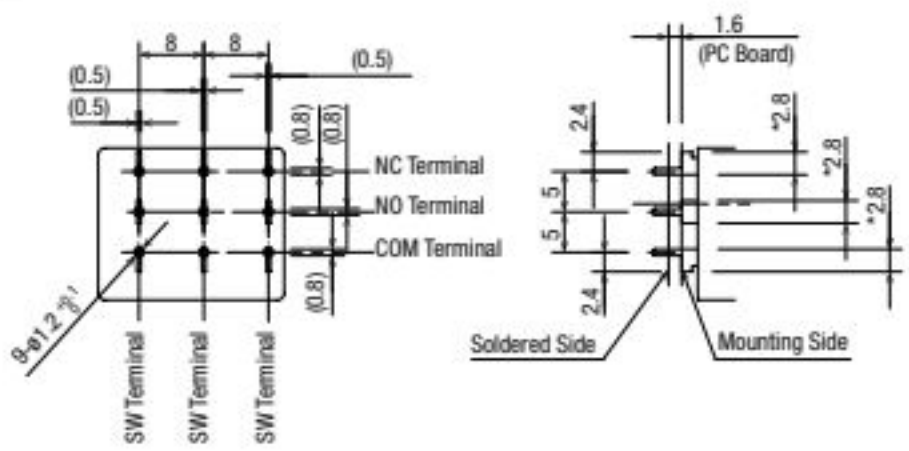

PC Board Drilling Layout (Bottom View)

SPDT/DPDT Contacts

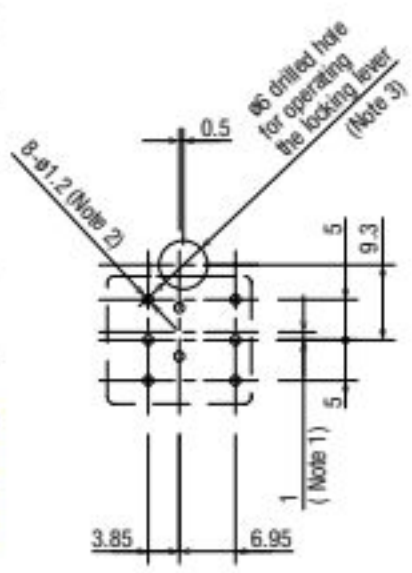

3PDT Contacts

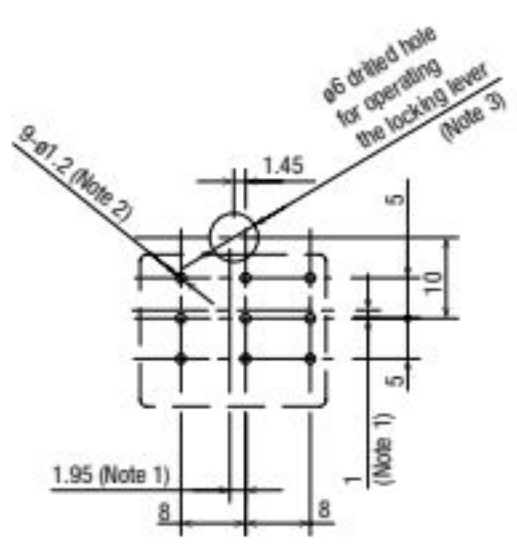

Note 1: When designing, note the alignment of center lines of the contact blocks and center lines of the operators.
Note 2: The diameter of the terminal hole is ø1.2.
Note 3: Hole diameter may vary to meet installation requirements. Determine the location and the size of the hole so that the locking lever can be operated.

Single Board Mounting

IDEC's LB/LBW Series is available for single board mounting.

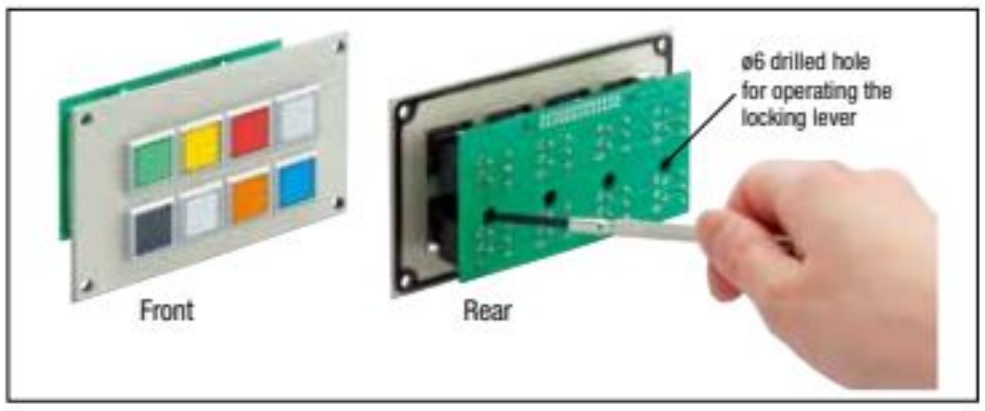

Installing and Removing Contact Blocks

Turn the locking lever to install and remove contact blocks on the PC using a screwdriver from a hole in the PC board. See "Notes for Designing PC Board and Circuit" on B-121. Determine the location of the switches so that the locking lever can be operated. See "Removing and Installing the Contact Block" on B-131.

Mounting Holes and Assembly Procedure

Drill mounting holes in the panel as shown below. When the units are mounted collectively, provide adequate clearance.

Panel Cut-out for Positioning

Standard Bezel (LB1/LB2/LB3/LB4)

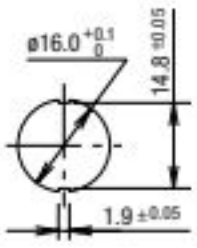

LB Series Flush Bezel (LB6/LB6M/LB6G)

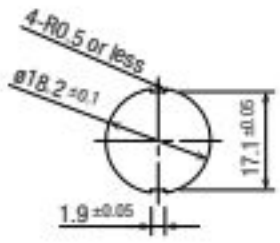

LBW Series Flush Bezel (LBW6/LBW6M/LBW6G)

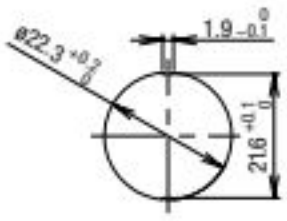

Mounting Hole Layout

Standard Bezel (LB1/LB2/LB3/LB4)

SPDT/DPDT Contacts

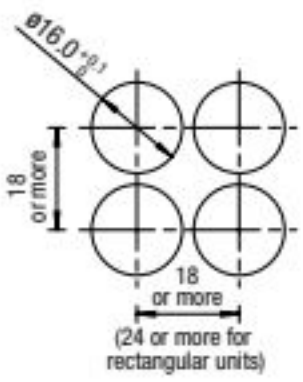

3PDT Contacts

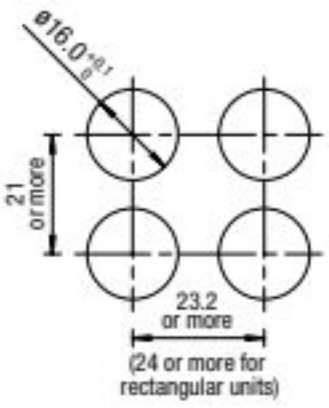

LB Series Flush Bezel

SPDT/DPDT Contacts

LB6/LB6M/LB6G

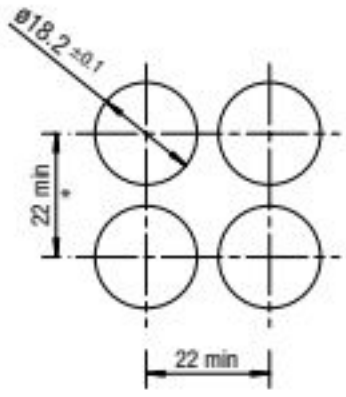

3PDT Contacts

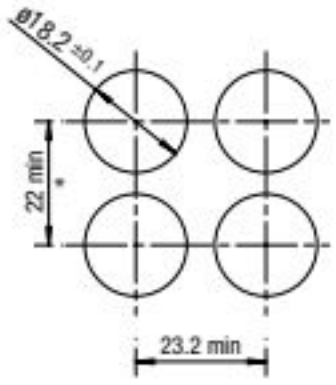

LB7/LB7M/LB7G

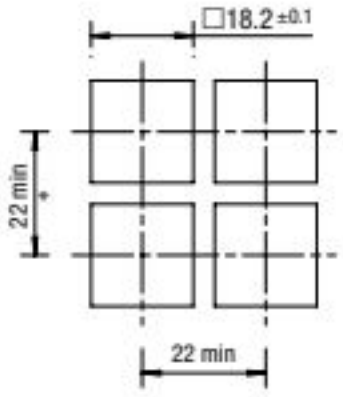

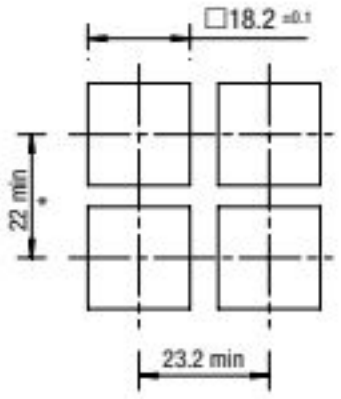

LB8/LB8M/LB8G

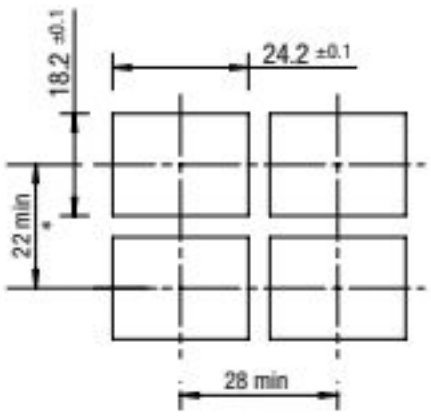

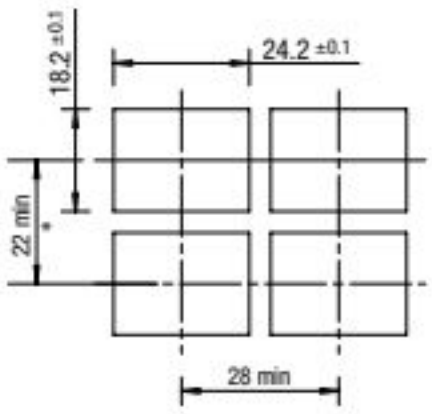

* 45 mm minimum for switches with guard

LBW Series Flush Bezel

LBW6/LBW6M/LBW6G

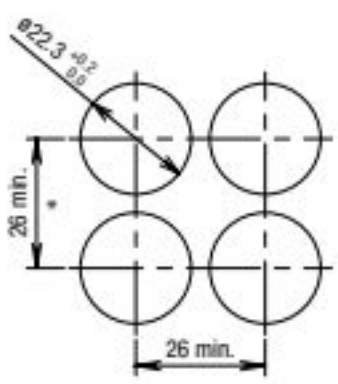

LBW Series Flush Bezela

LBW7/LBW7M/LBW7G

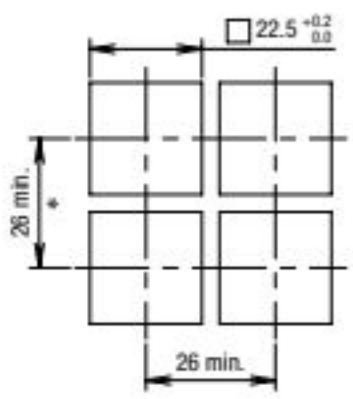

* 53 mm minimum for switches with guard

Assembly Procedure

1. Install the operator to the panel.
2. Mount the contact block to the operator from the rear.
3. Turn the locking lever to lock the contact block.
4. Insert the PC board to terminals and solder.

Note 1: Make sure that each terminal is inserted into the PC board correctly.
Note 2: Do not apply tensile force to the connector cable for an extended period of time.
Note 3: Do not expose the contact block to water.
Note 4: Ensure to lock contact blocks when the contact blocks are installed on the operators.

• UP series can be installed on the same board. For details, see B-123.

Download catalogs and CAD from http://eu.idec.com/downloads

UP Series Single Board Mount Pilot Lights

Mounts on the same panel as LB/LBW series

- Three illumination colors: Green (G), red (R), and white (W)

Specifications

Color Code		Red (R), White (W)	G (Green)
Rated Current (I)		7mA	2mA
Maximum Current (Ta: 25°C)	Reverse Voltage (V_R)	9V	5V
	Operating Temperature (T_{opr})	–25 to +55°C (no freezing)	
	Storage Temperature (T_{stg})	–30 to +80°C (no freezing)	
Forward Voltage (V_f)		Standard value: 2V (If=7mA)	Standard value: 2.7V (If=2 mA)
Dielectric Voltage		Between live and dead parts: 500V AC, 1 minute	
Weight (approx.)		4.3g (UP8-89V1), 5.1g (UP8-89V2)	

UP Series

Mounting Hole Size	Shape	Degree of Protection (IEC 60529)	Mountable Unit	Part No.	Ordering No.	Illumination Color Code	Package Quantity
ø8 UP8 With standard bezel / With flush bezel	Shroud	IP40	Standard Bezel	UP8-89V1∗	UP8-89V1∗PN10	Specify the color code in place of ∗ in the Part No. G: green R: red W: white	10
			Flush Bezel	UP8-89V2∗	UP8-89V2∗PN10		
ø9 UP9P	Shroud	IP65	Standard bezel Flush bezel	UP9P-99V1∗	UP9P-99V1∗PN10		10

- LED cannot be replaced.

Note: Connect an external current limiting resistor in series. Otherwise, the LED may be damaged.

Dimensions

All dimensions in mm.

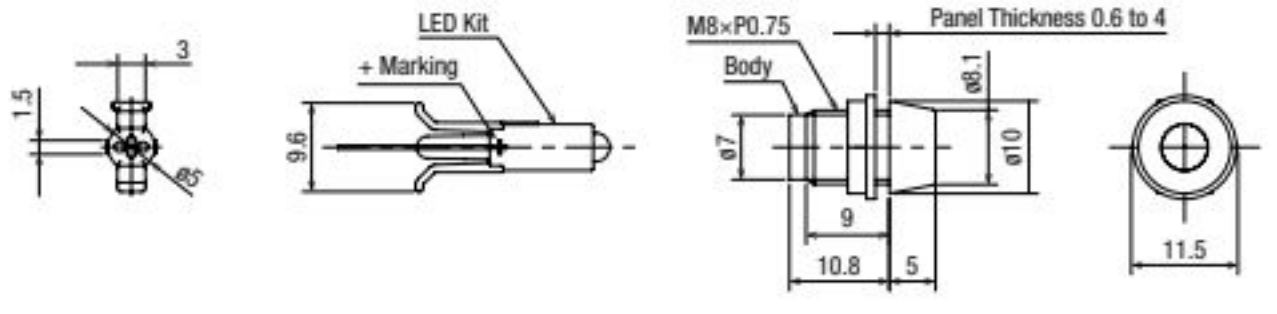

UP8-89V1

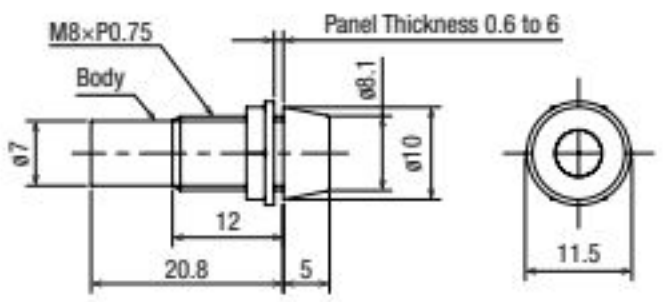

UP8-89V2

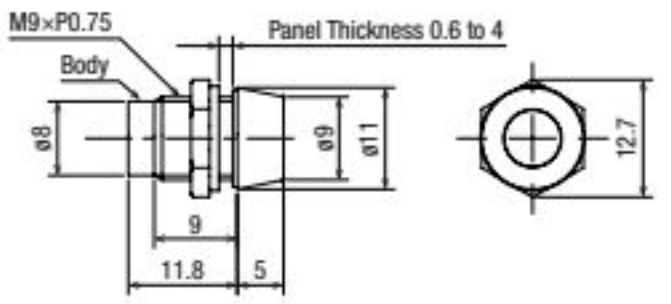

UP9P-99V1

[Assembly Drawing]

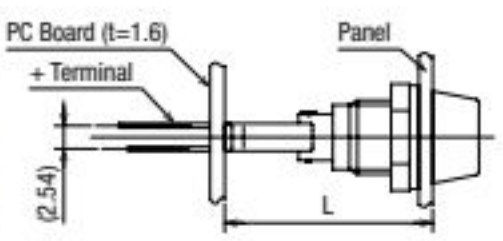

Dimensions (L)

Standard Bezel	22.5mm
Flush Bezel	29.9mm

PC Board Mounting Hole

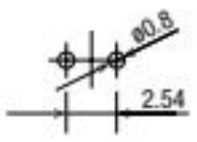

Panel Cut-out

UP8

UP9P

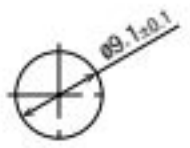

Internal Circuit

The longer pin is the positive terminal

For more information, visit http://eu.idec.com

Safety Precautions

- Turn off power to the unit before installation, removal, wiring, maintenance, and inspection.
  Failure to turn off may cause electrical shocks or fire hazard.
- For wiring, use wires of a proper size to meet the voltage and current requirements.
- Improper soldering or failure to tighten the terminal screw may cause overheating and fire.

Single Board Mounting

UP series miniature pilot light single board mounting types can be mounted with LB/ LBW series on the same panel.
Follow the instructions below on single board mounting.

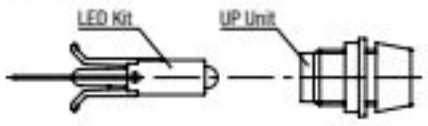

1. Mount the LED kit to the PC board.

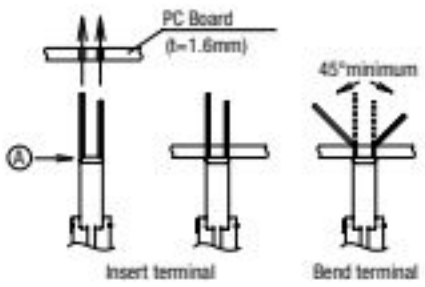

Temporary mounting

1. Note the polarity of the terminals and insert the terminals to the PC board.
2. Make sure that part A of the LED kit is pressed tightly to the PC board. Bend the terminals sideways as shown on the left.

2. Mount the operator and the UP series pilot lights on to the control panel.

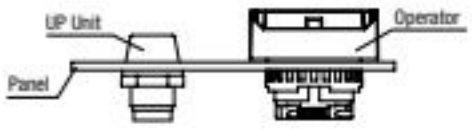

3. Mount the contact block to the operator of the miniature control unit and lock the unit by turning the locking lever.

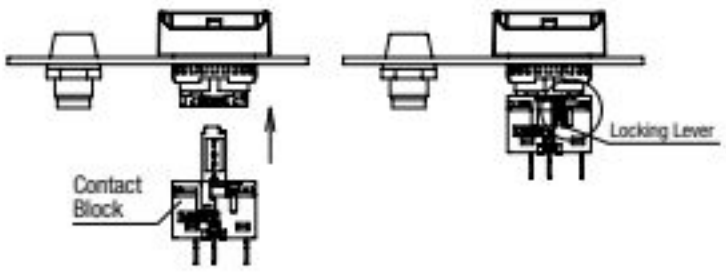

4. Install the PC board in 1. to the panel in 3.

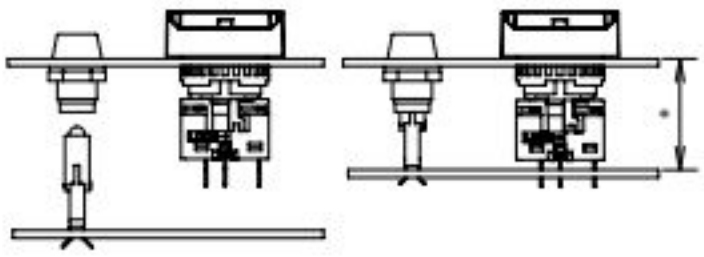

Note: Make surethat the LED kit is inserted into the UP series unit.

* When mounting LB/LBW and UP series on a single board, make sure that the distance between the front of the panel and the mounting side of the PC board (gasket distortion is taken into consideration) is as shown in the table below.

Part No.	Mountable Unit	Distance (*)
UP8-89V1*	Standard bezel	22.5mm
UP8-89V2*	Flush bezel	29.9mm
UP9P-99V1*	Standard bezel	22.5mm
	Flush bezel	29.9mm

5. Solder the terminals.
   Before soldering, make sure that each terminal of the contact block is securely inserted into the PC board holes.

Instructions

Polarity

Pay attention to the polarity of the power supply as UP series units do not contain a diode for protection against reverse polarity. The long terminal is positive and the short terminal is negative.

Current Limiting Resistor

When using a UP series unit without a built-in current limiting resistor, connect an external current limiting resistor. Calculate the resistance using the following formula.

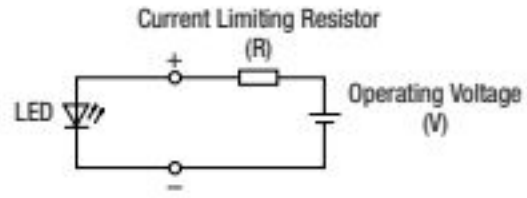

$$\text{Resistance } (\Omega) = \frac{\text{Operating Voltage (V)} - \text{Forward Voltage (Vf)}}{\text{Rated Current (I)} *}$$

* Rated Current (I) = R (red), W (white) : 0.007A
G (green) : 0.002A
Forward Voltage (Vf) = R (red), W (white) : 2V
G (green) : 2.7V

Note: Use a resistor of higher resistance than the calculated value (Ω)

$$\text{Rated Wattage of Resistor (W)} = \text{Rated Current (I)} \times \text{Operating Voltage (V)} \times 2 \text{ to } 3 *$$

* 2 to 3 is a safety factor

<Current Limiting Resistor Reference Value>

Operating Voltage \ Color	Red (R), White (W)	Green (G)
5V DC	430Ω (1/4W)	1200Ω (1/4W)
6V DC	560Ω (1/4W)	1600Ω (1/4W)
12V DC	1500Ω (1/4W)	4700Ω (1/4W)
24V DC	3000Ω (1/2W)	11000Ω (1/4W)

Countermeasures against Dim Lighting

See B-136.

Wiring

Solder the terminal at 350°C within 3 seconds using a 60W soldering iron. SnAgCu type lead-free solder is recommended.
When soldering, do not touch the pilot light housing with the terminal. Do not bend the terminal or apply excessive force to the terminal.

Notes on Panel Mounting

Tightening torque should not exceed 0.49 N·m. Do not use pliers. Do not tighten with excessive force, otherwise the locking ring will be damaged.

PC Board and Circuit Design

Use glass epoxy copper clad laminate, double-sided through-hole PC boards with a thickness of 1.6 mm.

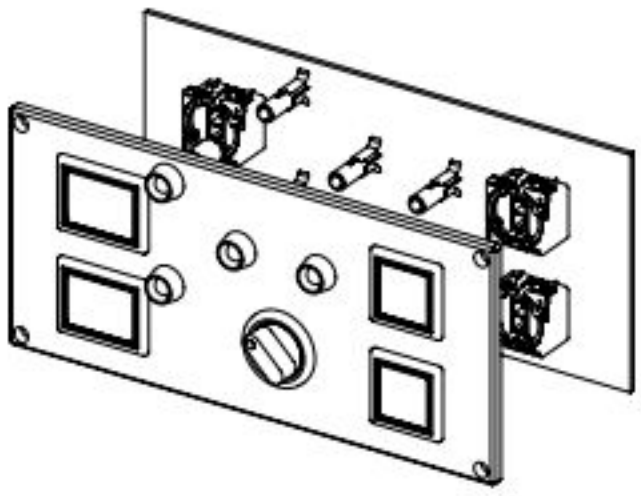

Example of single board mounting

Download catalogs and CAD from http://eu.idec.com/downloads

Accessories

Package Quantity:1

Shape			Specification	Part No.	Ordering No.	Package Quantity	Remarks
Locking Ring Wrench			Metal (Nickel-plated brass)	MT-001	MT-001	1	Used to tighten the locking ring when installing the units on to the panel.
For Standard Bezels	Lens Removal Tool		Stainless Steel	MT-101	MT-101	1	Used to remove the lens or button. (for standard bezels)
For Standard Bezels	Switch Guard (spring return)	180° Spring return For round / square units (LB1/LB2)	Guard (Polyacetal) Base (Polyarylate)	AL-K6SP	AL-K6SP	1	Degree of protection: IP65 Used to protect pushbuttons and illuminated pushbuttons from inadvertent operation. See B-127 for dimensions. With the gasket mounted on the switch, attach the switch guard and mount on the panel.
For Standard Bezels	Switch Guard (spring return)	180° Spring return For rectangular units (LB3/LB4)	Guard (Polyacetal) Base (Polyarylate)	AL-KH6SP	AL-KH6SP	1	
For Standard Bezels	Switch Guard (spring return)	180° Spring return for Single Board Mounting For rectangular units (LB3/LB4)	Guard (Polyacetal) Base (Polyarylate)	LA9Z-K3	LA9Z-K3	1	Degree of protection: IP65 With the gasket mounted on the switch, attach the switch guard and mount on the panel. See B-127 for dimensions.
For Standard Bezels	Switch guard (remains open)	Remains 110°/180° open (Can be used for single board mounting) For round / square units (LB1/LB2)	Guard (Polyacetal) Base (Polyarylate)	LB9Z-K2	LB9Z-K2	1	Degree of protection: IP40 Used to protect pushbuttons and illuminated pushbuttons from inadvertent operation. See B-127 for dimensions. With the gasket mounted on the switch, attach the switch guard and mount on the panel. See B-136 for dimensions. When using for single board mounting, remove the rubber gasket from the switch.
For Standard Bezels	Switch guard (remains open)	For rectangular units (LB3/LB4)		LB9Z-K3P	LB9Z-K3P	1	Degree of protection: IP65 With the gasket mounted on the switch, attach the switch guard and mount on the panel. See B-127 for dimensions.
For Standard Bezels	Rubber Boot	1. For round units (LB1)	Rubber (Transparent silicon rubber)	LB9Z-D1	LB9Z-D1	1	Degree of protection: IP65 See B-127 for dimensions. See B-135 for mounting.
For Standard Bezels	Rubber Boot	2. For square units (LB2)	Rubber (Transparent silicon rubber)	LB9Z-D2	LB9Z-D2	1	
For Standard Bezels	Rubber Boot	3. For rectangular units (LB3/LB4)	Rubber (Transparent silicon rubber)	LB9Z-D3	LB9Z-D3	1	
For Standard Bezels	Mounting Hole Plug	Metal	[Plug] Metal (Zinc diecast) [Locking nut] Polyacetal [Gasket] Nitrile rubber	AL-BM6	AL-BM6	1	Degree of protection: IP65 Tightening torque: 0.1 to 0.29 N·m See B-127 for dimensions.
For Standard Bezels	Mounting Hole Plug	Rubber	Nitrile rubber (black)	AL-B6	AL-B6PN05	5	Degree of protection: IP65 See B-127 for dimensions.

For more information, visit http://eu.idec.com

Accessories

Package Quantity:1

Shape			Specification	Part No.	Ordering No.	Package Quantity	Remarks
For LB Series Flush Bezels	Rubber Boot ① ② ③	1. For round units (LB6/LB6M)	Rubber (Transparent silicon rubber)	LB9Z-D6	LB9Z-D6	1	Degree of protection: IP65 See B-128 for dimensions. See B-135 for mounting.
		2. For square units (LB7/LB7M)		LB9Z-D7	LB9Z-D7	1	
		3. For rectangular units (LB8/LB8M)		LB9Z-D8	LB9Z-D8	1	
	Mounting Hole Plug ① ② ③	1. For round units (LB6/LB6M)	[Plug] Polyamide (Black) [Gasket] Nitrile rubber [Mounting Plate] Stainless Steel	LB9Z-BS6∗	LB9Z-BS6∗	1	∗ Color code: blank (black), W (white) Degree of protection: IP65 Panel thickness: 0.5 to 3.2 mm See B-128 for dimensions.
		2. For square units (LB7/LB7M)		LB9Z-BS7∗	LB9Z-BS7∗	1	
		3. For rectangular units (LB8/LB8M)		LB9Z-BS8∗	LB9Z-BS8∗	1	
For LBW Series Flush Bezels	Mounting Hole Plug ① ②	1. For round units (LBW6/LB6W6M)	[Plug] Polyamide (Black) [Gasket] Nitrile rubber [Mounting Plate] Stainless Steel	LBW9Z-BS6∗	LBW9Z-BS6∗	1	∗ Color code: blank (black), W (white) Degree of protection: IP65 Panel thickness: 0.5 to 3.2 mm See B-128 for dimensions.
		2. For rectangular units (LBW7/LB6W7M)		LBW9Z-BS7∗	LBW9Z-BS7∗	1	
	Mounting Hole Plug	Metal	[Plug] Zinc diecast [Locking Ring] Polyamide [Gasket] Nitrile rubber	LW9Z-BM	LW9Z-BM	1	Degree of protection: IP66 Tightening torque: 1.2 N·m See B-128 for dimensions.
	Mounting Hole Plug	Rubber	Nitrile rubber	LW9Z-BP1	LW9Z-BP1	1	Degree of protection: IP65 Tightening torque: 2.0 N·m See B-128 for dimensions.
Terminal Cover ① ②		1. For SPDT/DPDT contacts	PBT (White)	LB9Z-VL2	LB9Z-VL2PN10	10	See B-128 for dimensions. See B-131 for mounting.
		2. For 3PDT contacts		LB9Z-VL3	LB9Z-VL3PN10	10	
Key Reversible key Non-reversible key		For key selector switches (wave key)	Metal (zinc nickel-plated)	LA9Z-SK-∗	LA9Z-SK-∗PN02	2	Specify a key number in place of ∗ in the Part No. Blank: Standard key 0H (reversible) 1H to 2H: Reversible key 3H to 6H: Non-reversible key See B-128 for dimensions.
Keys		For key selector switches (disc tumbler key)	Metal (brass nickel-plated) 18×1.8×25.1 t1.8	AS6-SK-132	AS6-SK-132PN02	2	

Dimensions for Accessories

All dimensions in mm.

For LB Series Standard Bezel

Rubber Boot

For round units
(LB9Z-D1)

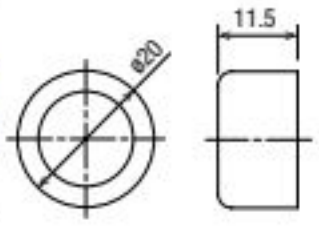

For square units
(LB9Z-D2)

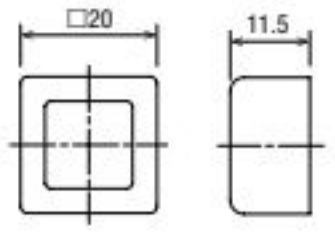

For rectangular units
(LB9Z-D3)

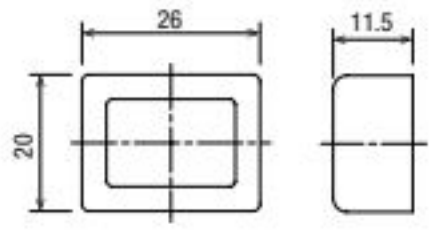

Mounting Hole Plug

AL-B6

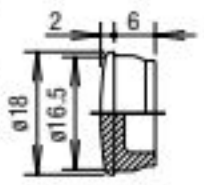

Mounting Hole Layout

AL-BM6

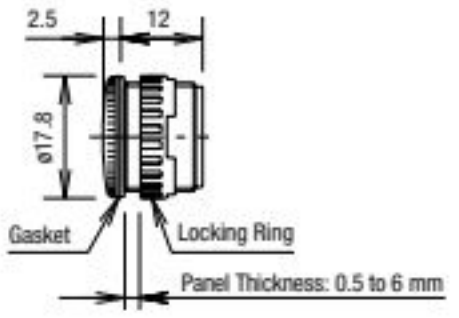

Mounting Hole Layout

Switch Guard (Spring Return)

For round / square units
(AL-K6SP)

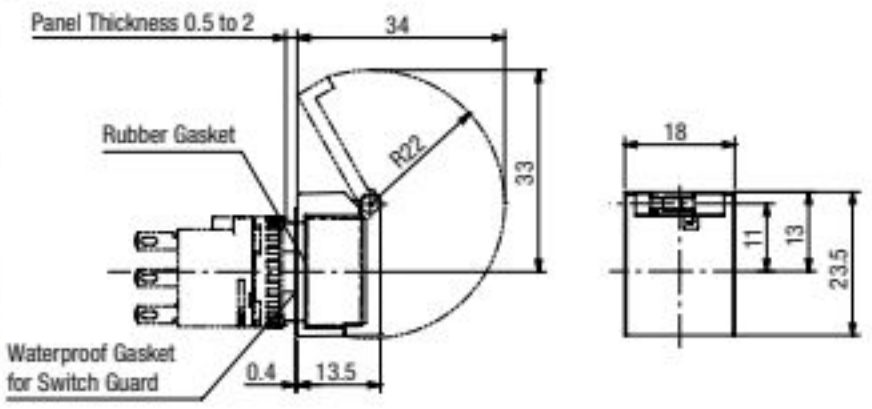

For rectangular units
(AL-KH6SP)

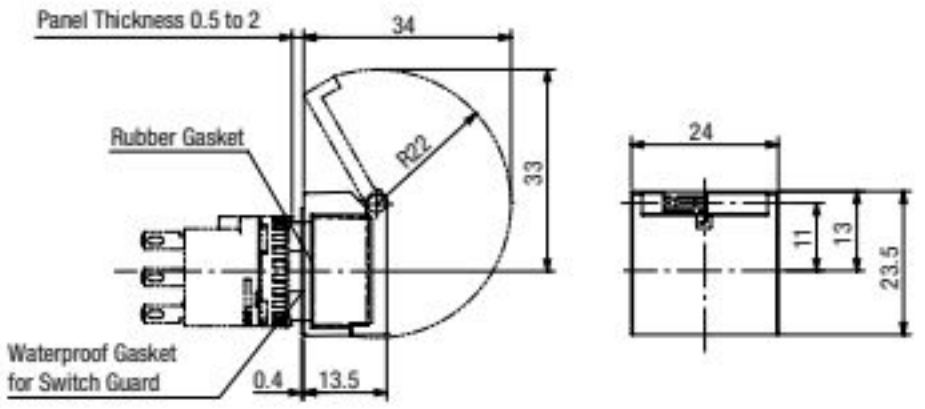

For Single Board Mounting (LA9Z-K3) (Note)

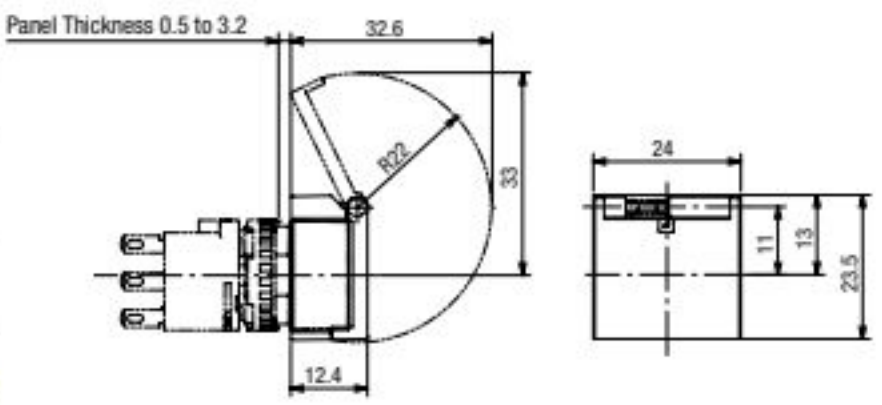

Note: The panel depth is the same for switches with or without switch guards. Both types can be installed on the same PC board.

Switch Guard (Remains Open)

For round / square units (Note)
(LB9Z-K2)

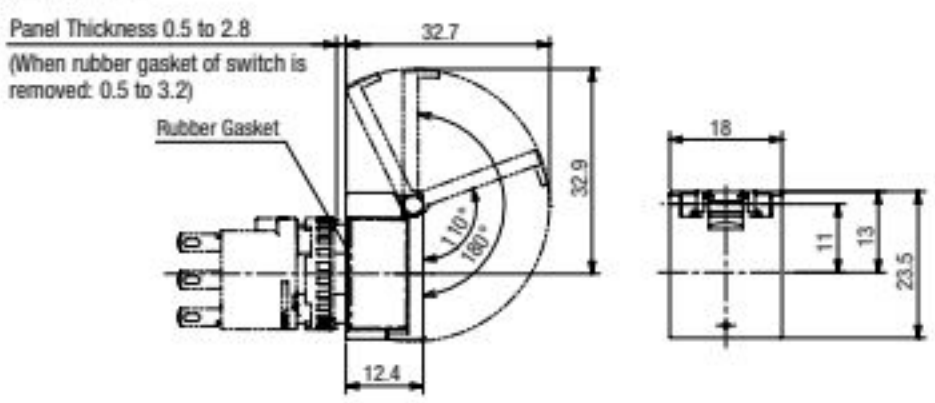

For rectangular units (Note)
(LB9Z-K3P)

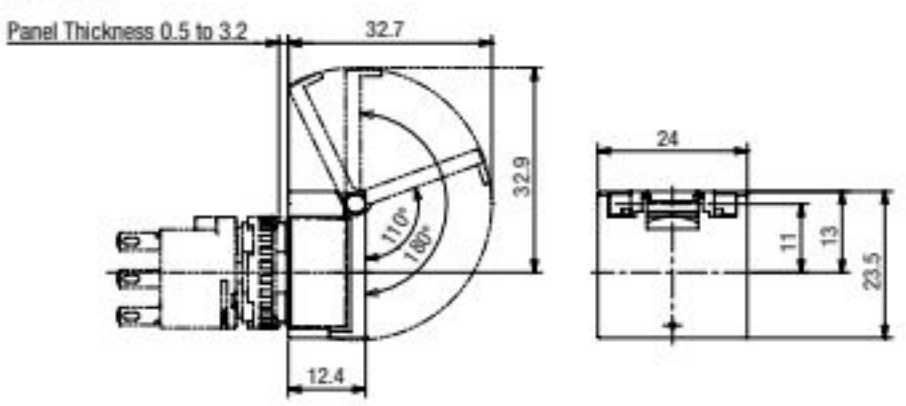

For more information, visit http://eu.idec.com

Dimensions for Accessories

All dimensions in mm.

For LB Series Flush Bezel

Rubber Boot

For round units (LB9Z-D6)

For square units (LB9Z-D7)

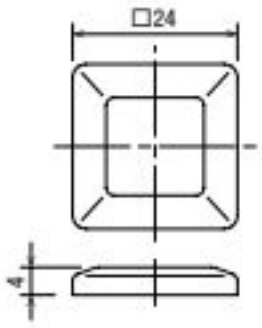

For rectangular units (LB9Z-D8)

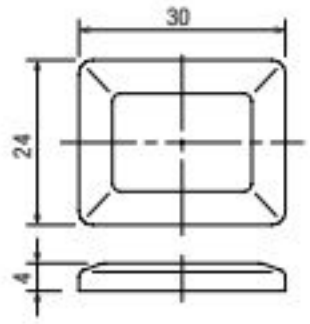

Mounting Hole Plug

For round units (LB9Z-BS6∗)

For square units (LB9Z-BS7∗)

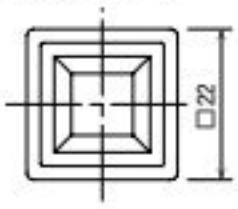

For rectangular units (LB9Z-BS8∗)

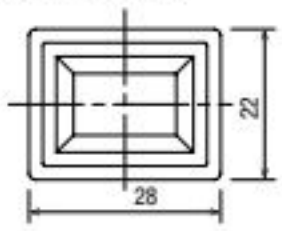

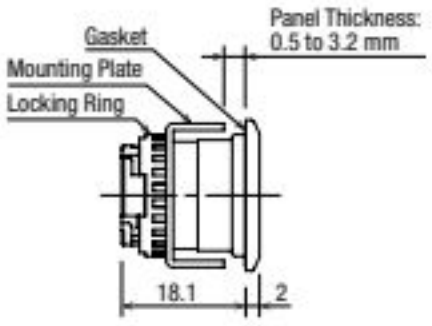

Mounting Hole Layout

Mounting Hole Layout

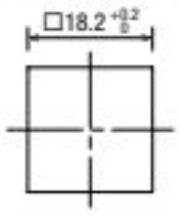

Mounting Hole Layout

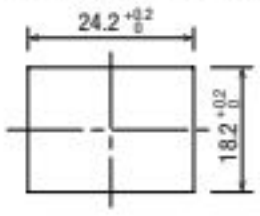

For LB Series Flush Bezel

Mounting Hole Plug

Metal (LW9Z-BM)

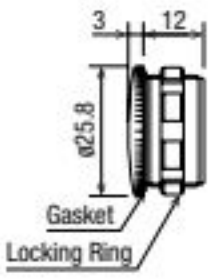

Mounting Hole Layout

Rubber (LW9Z-BP1)

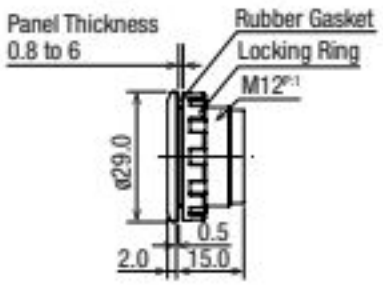

Mounting Hole Layout

For round units (LBW9Z-BS6∗)

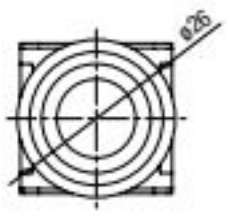

Mounting Hole Layout

For round units (LBW9Z-BS6∗)

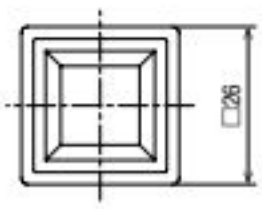

Mounting Hole Layout

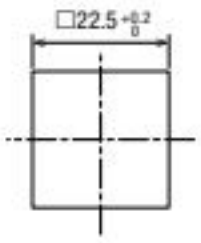

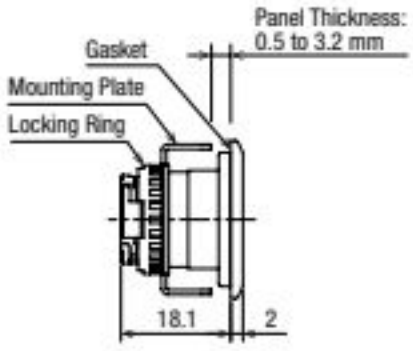

Terminal Cover

For SPDT/DPDT contacts (LB9Z-VL2)

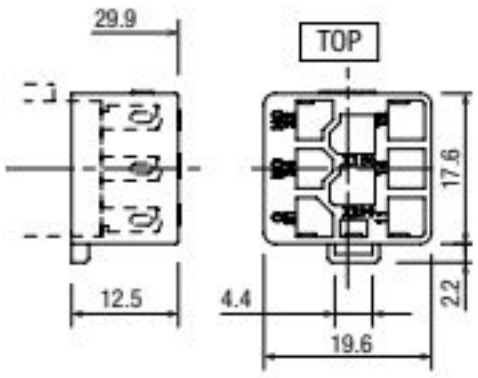

For 3PDT contacts (LB9Z-VL3)

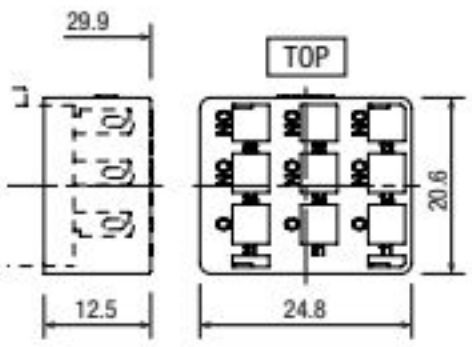

Key (Wave Key)

Reversible key

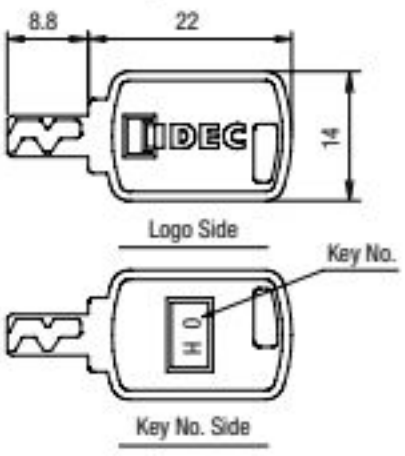

Non-reversible key

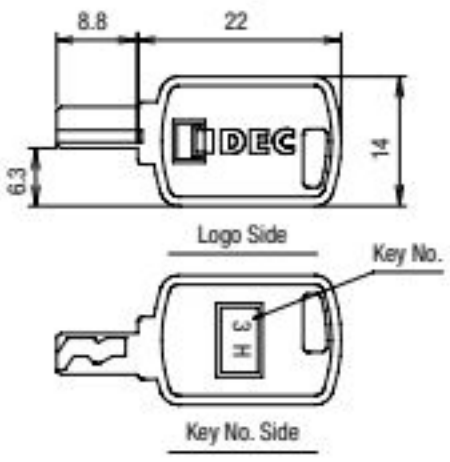

Download catalogs and CAD from http://eu.idec.com/downloads

Accessories

Shape			Material / Dimensions (W×H×D)	Part No.	Ordering No.	Package Quantity	Remarks
LB Series	Lens	1. For round units	Polyarylate ø15.4 H4	AL6M-L∗	AL6M-L∗PN05	5	Specify the color code in place of ∗ in the part no. A: Amber, C: Clear, G: Green, R: Red, S: Blue, Y: Yellow Note: Use a clear lens for pure white (PW) illumination.
		2. For square units	Polyarylate □15.4 H4	AL6Q-L∗	AL6Q-L∗PN05	5	
		3. For rectangular units	Polyarylate W21.4 H4 D15.4	AL6H-L∗	AL6H-L∗PN05	5	
		4. For dome units	Polyarylate ø16 H9.4	AL6D-L∗	AL6D-L∗PN05	5	
	Buttons	1. For round units	Polyarylate ø15.4 H4	AB6M-B∗	AB6M-B∗PN05	5	Specify the color code in place of ∗ in the part no. B: Black, G: Green, R: Red, S: Blue W: White, Y: Yellow
		2. For square units	Polyarylate □15.4 H4	AB6Q-B∗	AB6Q-B∗PN05	5	
		3. For rectangular units	Polyarylate W21.4 H4 D15.4	AB6H-B∗	AB6H-B∗PN05	5	
	Marking plate	1. For round units	Acrylic ø13.7 H0.8	AL6M-∗	AL6M-∗PN05	5	Specify the color code in place of ∗ in the part no. B: Black, W: White See B-133 for dimensions and engraving area.
		2. For square units	Acrylic □13.7 H0.8	AL6Q-∗	AL6Q-∗PN05	5	
		3. For rectangular units	Acrylic W19.7 H0.8 (0.4) D13.7	AL6H-∗	AL6H-∗PN05	5	
	Diffusion plate	For dome units	Acrylic ø13.6 H2.8	AL6D-W	AL6D-WPN05	5	White
	Anti-rotation Ring	Standard bezel	Metal (Stainless steel) □17.9 t0.6	LB9Z-LP1	LB9Z-LP1PN10	10	
	Anti-rotation Ring	Flush bezel	Metal (Stainless steel) 21×8.2×20.6 t0.8	LB9Z-LP6	LB9Z-LP6PN10	10	
LBW Series	Lens	1. For round flush units	Polyarylate ø20 H4	HA9Z-L11∗	HA9Z-L11∗PN05	5	Specify the color code in place of ∗ in the part no. A: Amber, C: Clear, G: Green, R: Red, S: Blue, Y: Yellow Note: Use a clear lens for pure white (PW) illumination.
		2. For square flush units	Polyarylate ø20 H4	HA9Z-L21∗	HA9Z-L21∗PN05	5	
		3. For round extended units	Polyarylate ø20.2 H7.8	LBW9Z-L12∗	LBW9Z-L12∗PN05	5	Specify the color code in place of ∗ in the part no. A: Amber, G: Green, R: Red, S: Blue, W: clear, Y: Yellow Note: Use a clear lens for pure white (PW) illumination.
	Buttons	1. For round flush units	Polyacetal ø20 H3.2 (L5)	HA9Z-B11∗	HA9Z-B11∗PN05	5	Specify the color code in place of ∗ in the part no. B: Black, G: Green, R: Red, S: Blue W: White, Y: Yellow
		2. For square flush units	Polyacetal ø20 H3.9 (L5)	HA9Z-B21∗	HA9Z-B21∗PN05	5	
		3. For round extended units	Polyacetal ø19.8 H7.3 (L9.1)	HA9Z-B12∗	HA9Z-B12∗PN05	5	
		4. For square extended units	Polyacetal ø19.8 H8 (L9.1)	HA9Z-B22∗	HA9Z-B22∗PN05	5	
	Marking plate	1. For round flush units	Acrylic ø17 t0.85 (L1.1)	HA9Z-P1∗	HA9Z-P1∗PN05	5	Specify the color code in place of ∗ in the part no. B: Black, W: White See B-134 for dimensions and engraving area.
		2. For square units	Acrylic □18.4 t0.85	HA9Z-P2∗	HA9Z-P2∗PN05	5	
	Anti-rotation Ring	LBW series	Metal (Stainless steel) 25×8.2×24.8 t0.8	LBW9Z-LP6	LBW9Z-LP6PN10	10	
Locking ring		All models	Polyamide ø17.9 H3.9	LB9Z-LN	LB9Z-LNPN10	10	
Illuminated selector knob operator		Illuminated selector switches	<For operator> Polyarylate Waterproof O-gasket Nitryl rubber ø15.4 H13	LA1A-F∗	LA1A-F∗PN02		Specify the color code in place of ∗ in the part no. G: green, R: red, W: white

For more information, visit http://eu.idec.com

Maintenance Parts

LB Series Maintenance LED Unit

Package Quantity: 1

Shape	Rated Operating Voltage	Part No. (Ordering No.)	* Color Code
LED Unit	5V DC	LB9Z-LED5*	A: Amber G: Green PW: Pure White R: Red S: Blue W: White
	12V AC/DC	LB9Z-LED1*	
	24V AC/DC	LB9Z-LED2*	

- All LB/LBW series contain an LED unit.
- Use a pure white (PW) LED unit for yellow (Y) illumination.

Transformer

Package Quantity: 1

Transformer	Operating Voltage	Operating Voltage Range	Part No. (Ordering No.)	Applicable Load
For 24V	100/110V AC	100/110V AC ±10%	TWR512	LB9Z-LED2* (24V AC/DC LED unit)
	200/220V AC	200/220V AC ±10%	TWR522	
	400/440V AC	400/440V AC±10%	TWR542	

- Terminal cover (TWR-VL3) is supplied as standard.
- Connect one LB9Z-LED2* to a transformer.

Specifications

Part No.	TWR5□2
Operating Voltage	100/110V AC, 200/220V AC, 400/440V AC (50/60Hz)
Current Draw	2.4VA
Rated Insulation Voltage	600V
Insulation Resistance	100 MΩ minimum (500V DC megger)
Operating Temperature	–30 to +60°C (no freezing)
Storage Temperature	–40 to +80°C (no freezing)
Operating Humidity	35 to 85% RH (no condensation)
Vibration Resistance	Damage Limits: 30 Hz, amplitude 1.5 mm Operating extremes: 5 to 55 Hz, amplitude 0.5 mm
Shock Resistance	Damage limits: 1,000 m/s² Operating Extremes: 100 m/s²
Dielectric Strength	2,500V AC, 1 minute
Terminal Screw	M3.5
Applicable Wire	2 mm² maximum, 2 wires maximum
Weight (approx.)	87g

Dimensions

All dimensions in mm.

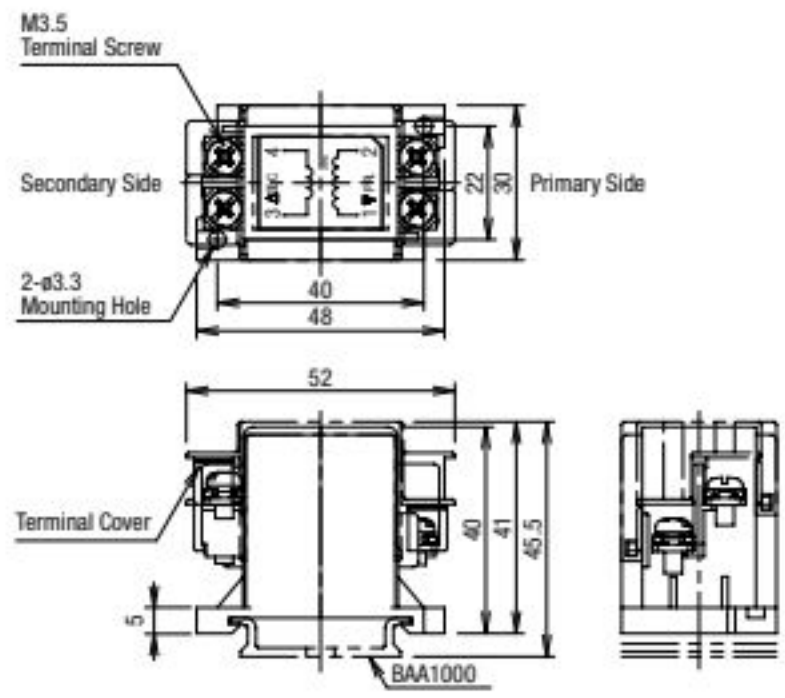

Accessories

35mm DIN Rail

Part No.	Ordering No.	Length	Material	Package Quantity
BAA1000	BAA1000PN10	1,000mm	Aluminum (approx. 200g)	10
BAP1000	BAP1000PN10	1,000mm	Steel (approx. 320g)	10

End Clip

Part No.	Ordering No.	Applicable DIN Rail	Package Quantity	Dimensions
BNL6	BNL6PN10	BAA1000 BAP1000	10	Approx. 15g Steel (Zinc-plated)
BC9Z-E/NS35N	BC9Z-E/NS35NPN10	BAA1000 BAP1000	10	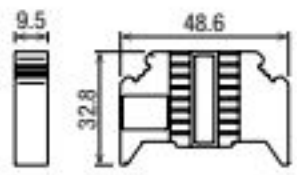 Approx. 15g

- See H-071 for DIN rail products.
- Use end clip BC9Z-E/N35NPN10 when using 400/440V AC primary voltage transformers.

Safety Precautions

- Turn off the power to the LB/LBW series before installation, removal, wiring, maintenance, and inspection. Failure to turn power off may cause electrical shocks or fire hazard.
- To avoid burning your hand, use the lamp holder tool when replacing the lamps.
- For wiring, use wires of a proper size to meet voltage and current requirements. Solder correctly according to the instructions in "Wiring" and "Notes on Terminal Cover." Improper soldering may cause overheating and create a fire hazard. Also, when using tab terminals, use receptacles of appropriate size.

Instructions

Wiring

1) Solder the terminals at 350°C within 3 seconds using a 60W soldering iron. Sn-Ag-Cu type is recommended when using leadfree solder. When soldering, do not touch the LB series with the soldering iron. Also ensure that no tensile force is applied to the terminal. Do not bend the terminal or apply excessive force to the terminal.
2) Use non-corrosive liquid flux.

Terminal Cover

Solder/tab terminal

Insert the terminal cover into the contact block with the TOP markings on the contact block and the terminal cover in the same direction.

Note: When wiring, insert the lead wires into the terminal cover holes before soldering.
After wiring, the terminal covers cannot be installed.

Standard Bezel

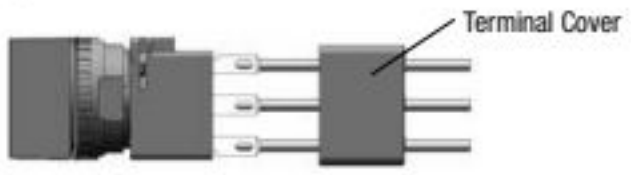

Flush Bezel

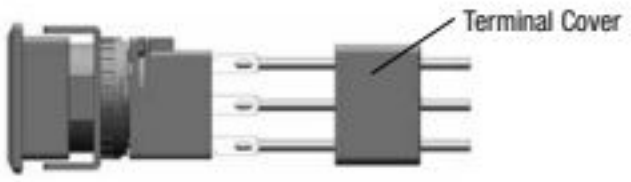

Operating Environment

- Do not use the LB/LBW series where corrosive gases exist or under an environment exceeding the operating temperature and humidity ranges. Otherwise, damages due to contact failure or change of surface color may occur.
- Major parts of the switch are plastic. Scratches or damages may occur when scraped with a sharp object or applied with excessive load or shock. Note that this may cause operation and appearance failure of the operator and bezel.
- Adherence of detergent, cutting oil, or special chemicals to the switch may result in operation failures and appearance failures such as change of surface color.

Handling

Contacts (micro switch)

When using NC (normally closed) and NO (normally open) contacts of the same microswitch, avoid connections of different voltages, or connections of different types of power supplies. Failure to observe this instruction may cause a short-circuit.

Protection against oil (IP65)

The LB series has been tested according to JIS C 0920: Appendix 1 by using water insoluble cutting oil Class N3, No. 8 (JIS K 2241) to prove that the switches will not be damaged by oil drops or splashes. This may not apply to special types of oils. Contact IDEC for details.

Removing and Installing the Contact Block

1) Turn the locking lever on the contact block in the direction opposite to the arrow on the housing. Then the contact block can be removed.
2) Insert the contact block with the TOP markings on the contact block and the operator placed in the same direction. Then lock the units, turning the locking lever in the direction of the arrow.

Note: When removing/installing the contact block, or when using the contact block alone, do not apply excessive force on the actuator. Deformed actuator may affect contact operation.

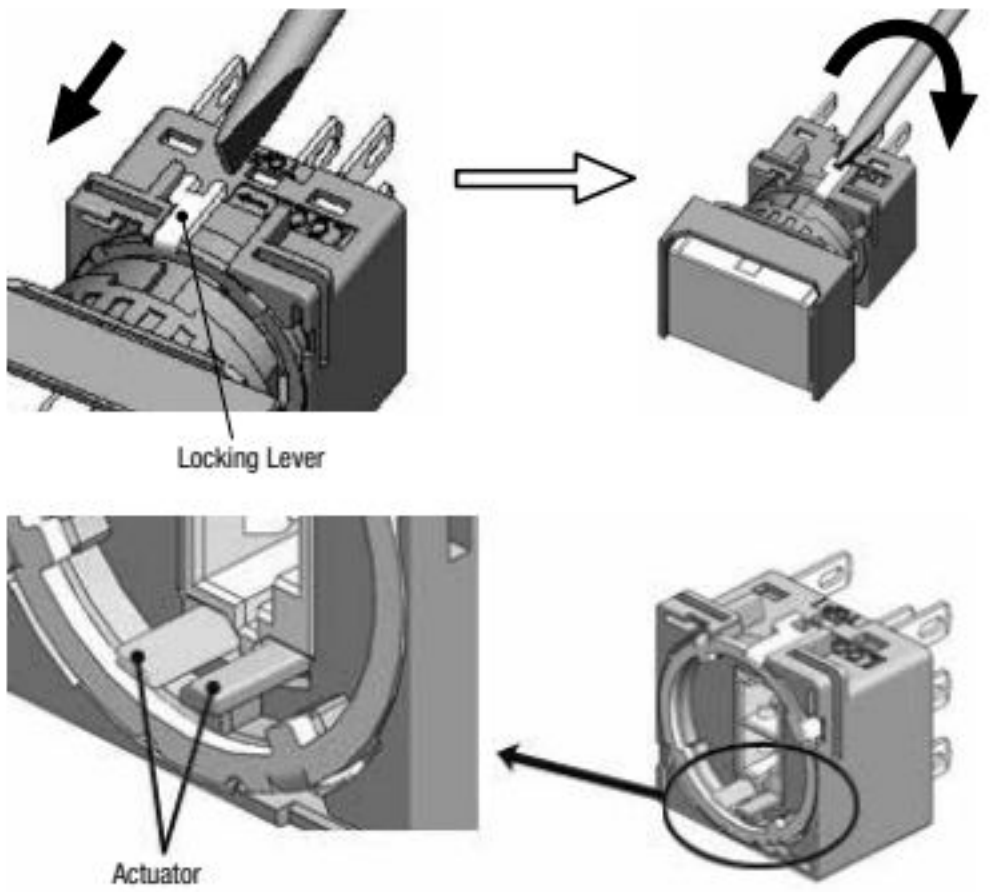

For more information, visit http://eu.idec.com

Instructions

Panel Mounting

Remove the contact block from the operator. Insert the operator into the panel cut-out from the front, then install the contact block to the operator.

(For Standard Bezel)

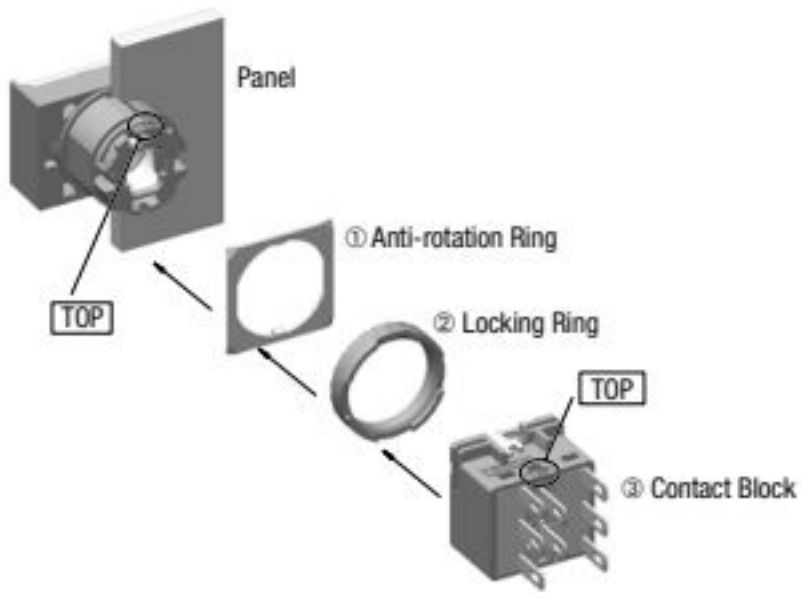

(For Flush Bezel)

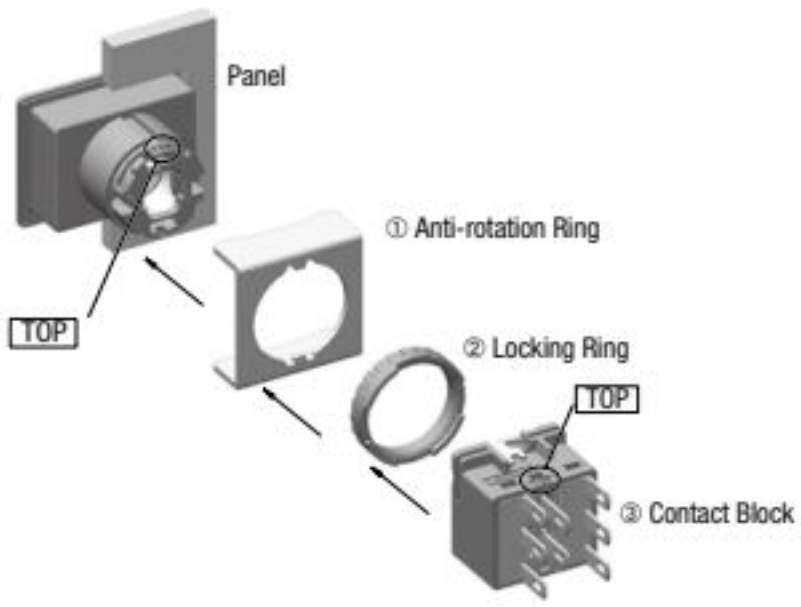

Notes on Mounting

Use the optional ring wrench (MT-001) to mount the operator onto the panel. The recommended tightening torque is 0.5 to 0.7 N·m. Do not use pliers. Excessive tightening will damage the locking ring.

Replacing the Lens and Marking Plate

Removing

[Removing the operator]

Standard Bezel

1) From the opposite side of the TOP marking, remove the operator (lens, marking plate, and lens holder) using the optional lens removal tool (MT-101) by gripping the recesses of the color lens.

Flush Bezel

1) From the opposite side of the TOP marking, push the tip (width: 3 mm, thickness: 0.5 mm) of the flat screwdriver to the groove of the color lens and pull out the operator (lens, marking plate, lens holder).

Note: For metallic bezels, the bezel may be damaged if the screwdriver is inserted from the TOP side or inserted deeply or with force into the groove of the lens.

[Removing the Operator]

2) Remove the marking plate by pushing the lens from the rear to disengage the latches between the lens and holder, using the screwdriver as shown below.

Note: The translucent in the lens holder cannot be removed because this filter is sealed to make the unit waterproof and oiltight.

LBW Series Pushbutton (button style)

LBW series pushbuttons (button style, see B-097) can be removed according to the following procedure. LBW series pushbuttons (button style) cannot be removed from the front of the panel.

[Removing the Operator]

1) Detach the operator unit and contact block. (See Removing and Installing the Contact Block on B-131)
2) Remove the button unit (button, button holder) by pushing out the cross-shaped protrusion (white) at the back of the operator with a screwdriver.

LBW Series Illuminated Pushbutton (round extended)

Screw-in lens. The lens can be removed by turning anticlockwise.

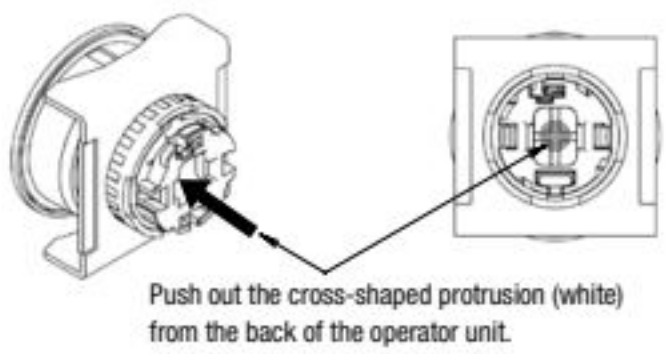

APEM
Switches & Pilot Lights
Control Boxes
Emergency Stop Switches
Enabling Switches
Safety Products
Explosion Proof
Terminal Blocks
Relays & Sockets
Circuit Protectors
Power Supplies
LED Illumination
Controllers
Operator Interfaces
Sensors
AUTO-ID
Flush Silhouette
ø16
ø22
ø30
Miniature
Pilot Lights
CW
LW-F
LB
LBW
UP
Flush Bezel

Instructions

Removing the Button

The button can be removed by inserting a small screwdriver into the groove of the button holder.

To attach the button to the button holder, align the groove on cross-shaped protrusion with the positioning protrusion on the button and insert securely.

Installing

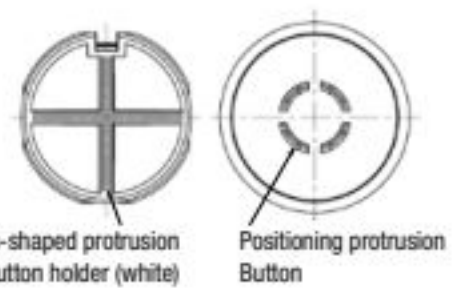

Insert the marking plate into the color lens, and press the lens onto the lens holder to engage the latches. Pay attention to the orientation of the marking plate.

LB/LBW Series Round

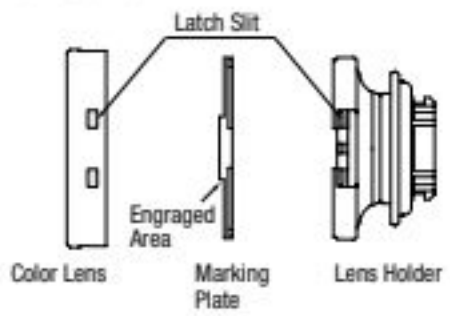

LB Series Square/Rectangular

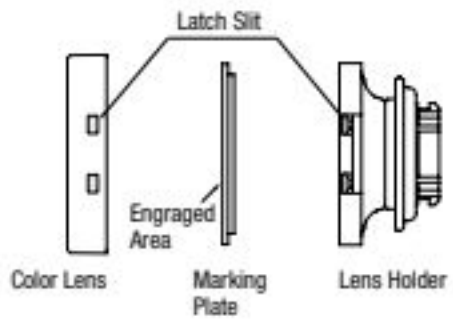

LBW Series Square

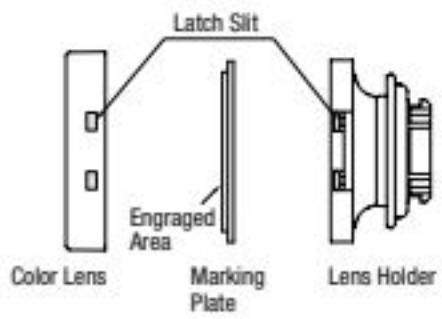

Installing the Lens Unit and Contact Block

To insert the lens unit into the operator, press in the lens unit by making sure that the latch on the operator is aligned with the latch on the lens unit.

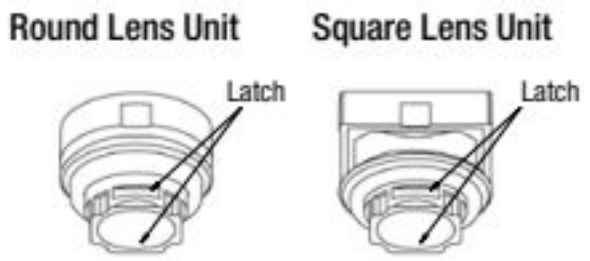

Standard Bezel

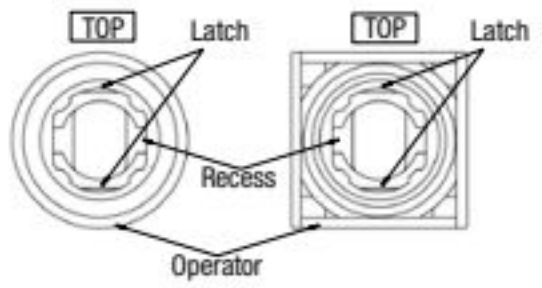

Flush Bezel

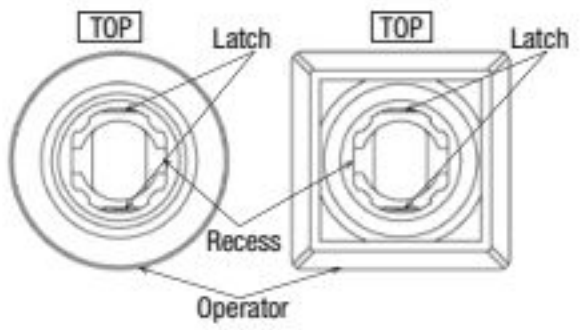

Marking Plates and Films

For illuminated pushbuttons, pushbuttons with lens, and pilot lights, legends and symbols can be engraved on the marking plates, or printed film can be inserted under the lens for labelling purposes.

Marking Plate and Marking Film Size

LB Series (flush bezel / standard bezel)

Lens	Round	Square	Rectangular
Built-in Marking Plate	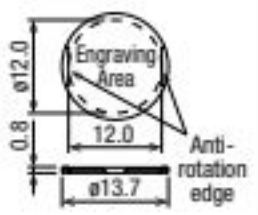	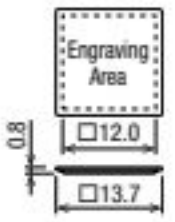	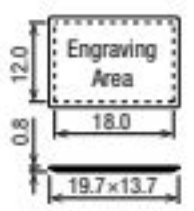
	• Engraving must be made on the engraving area within 0.5 mm deep. • The marking plate is made of white acrylic resin.		
Applicable Marking Film	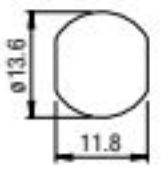	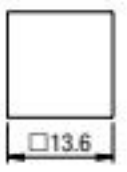	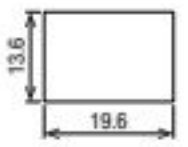
	• Film thickness: 0.1 mm per film • Marking film is not included. • Recommended marking film: Polyester film		

Instructions

LBW Series

Lens	Round Flush	Square	Round Extended
Built-in Marking Plate	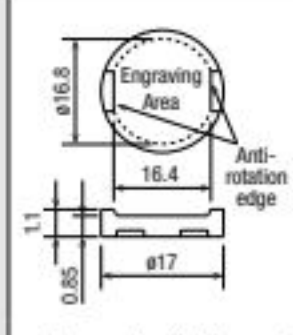	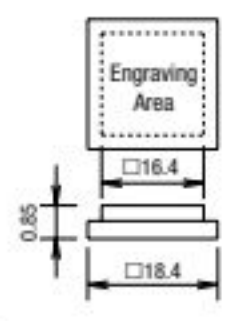	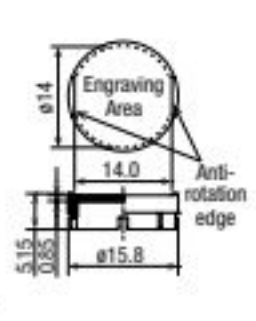
Applicable Marking Film	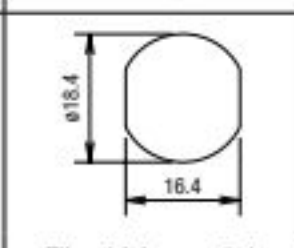	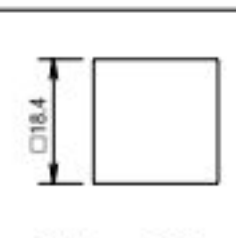	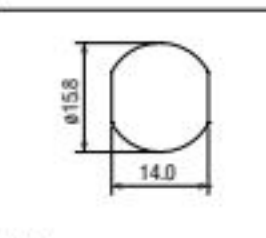

- Engraving thickness: 0.5 mm max.
- The marking plate is made of white acrylic resin.

- Film thickness: 0.1 mm per 2 films or 0.2 mm per film.
- Marking film is not included.
- Recommended marking film: Polyester film

LBW Series (ring-illuminated model)

Lens	Round (Note)	Square
Applicable Marking Film	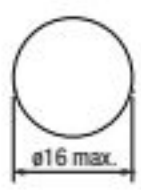	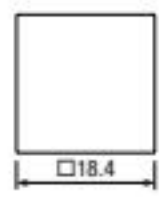

- Film thickness: 0.1 mm max.

Note: Use a film with adhesive and attach on the light shield sheet. Make sure that the marking film is properly installed and does not protrude from the edge of light shield sheet.

Ring Illuminated Model Lens Holder

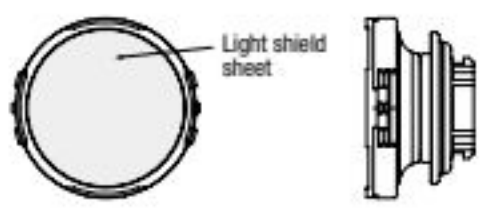

Insertion Order of Marking Plate and Film

LB/LBW Series Round

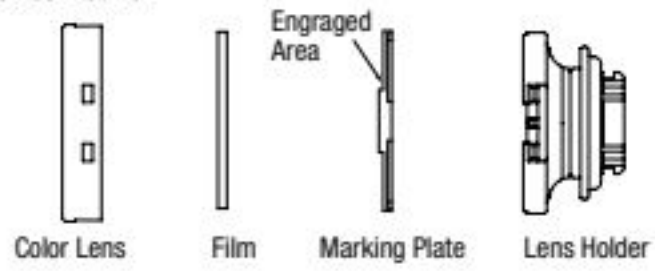

LB/LBW Series Square/Rectangular

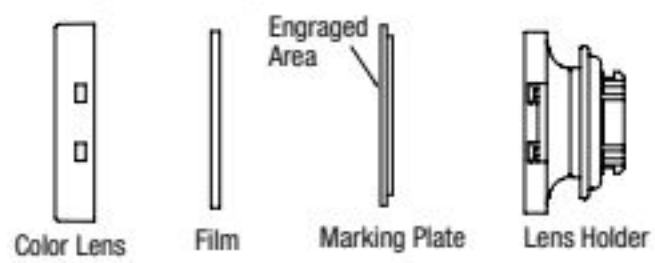

Note: Film is not included.

The marking plate must be engraved on the specified side as shown above. Pay attention to the orientation of the marking plate. When inserting a film, make sure to insert between the color lens and marking plate.

Note: Marking plate is not supplied with ring-illuminated model.

Replacing the LED Unit

The LED unit can be replaced without tools by pulling out the lens unit from the contact block.

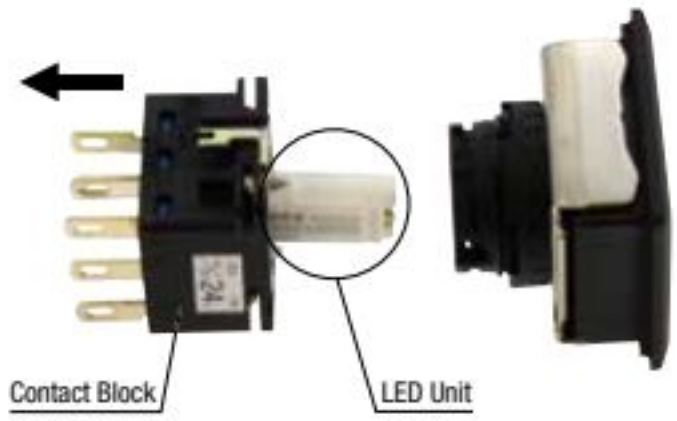

Orientation of the LED unit

Insert the LED unit into the contact block with the TOP markings on the contact block and LED unit in the same orientation.

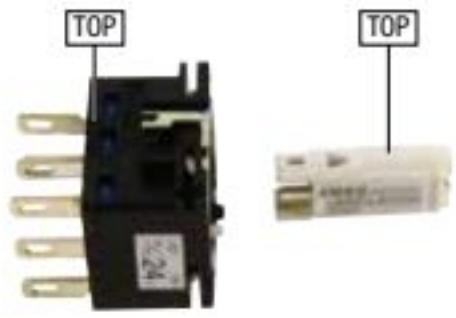

Notes on replacing the LED Unit

When replacing the LED unit, make sure that static electricity is not applied.

Make sure that the LB/LBW series has cooled down before replacing the LED unit. To avoid burn injuries, be careful not to touch the unit while it is still hot.

Notes on Using Quick Connect Terminals

1) Use #110 tab quick connects, 0.5 mm-thick.
2) When connecting the terminals on the left and center, make sure that surfaces of the quick connects face each other. Otherwise, short-circuit may occur.

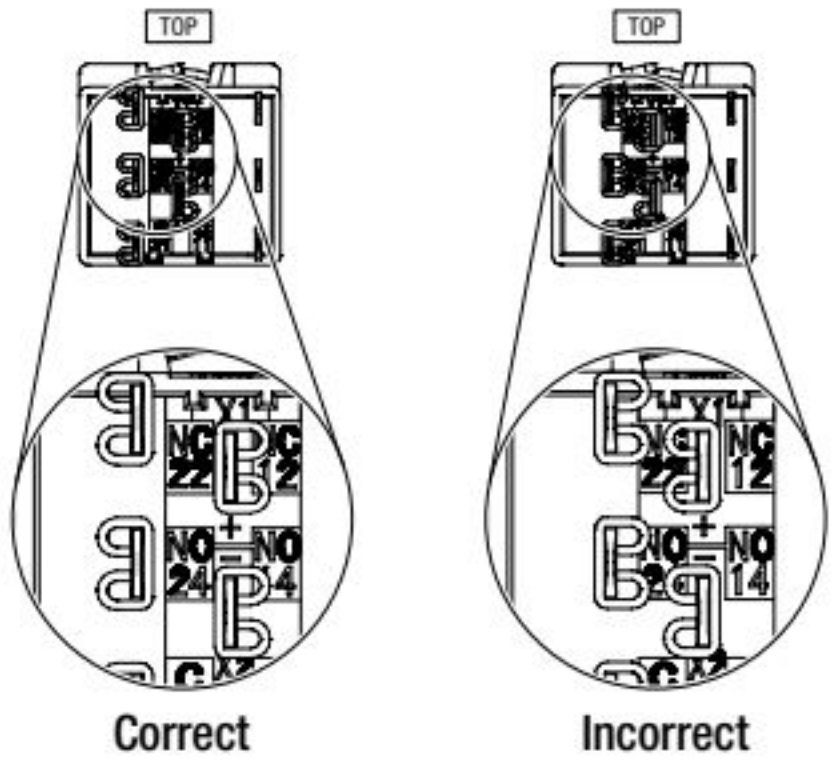

3) Apply only horizontal force against the panel to the tab. The switch may be damaged if a force other than a horizontal force is applied.

APEM
Switches & Pilot Lights
Control Boxes
Emergency Stop Switches
Enabling Switches
Safety Products
Explosion Proof
Terminal Blocks
Relays & Sockets
Circuit Protectors
Power Supplies
LED Illumination
Controllers
Operator Interfaces
Sensors
AUTO-ID
Flush Silhouette
ø16
ø22
ø30
Miniature
Pilot Lights
CW
LW-F
LB
LBW
UP
Flush Bezel

Instructions

Installing the Rubber Boot

When using in places where the switches are subjected to water splash or an excessive amount of dust, make sure to use the optional rubber boot.
As shown in the drawing below, ① remove the gasket from the operator, and ② attach the rubber boot from the front (button side).

Standard Bezel

For rectangular and square units, pull out the seals of the rubber boot and place them around the operator sleeve as shown below. Make sure that the seals are not twisted or tucked inside and that the gasket is removed, otherwise waterproof and dustproof characteristics are not ensured.

How to Install the Rubber Boot

Rectangular

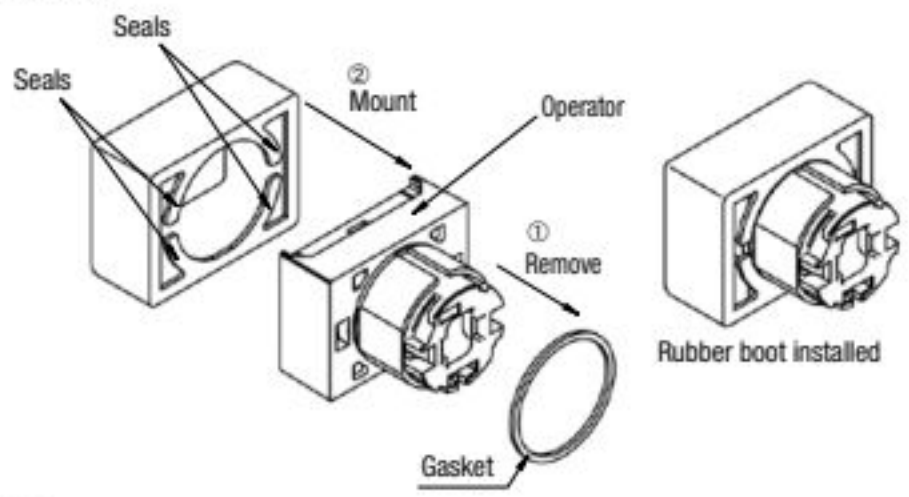

Square

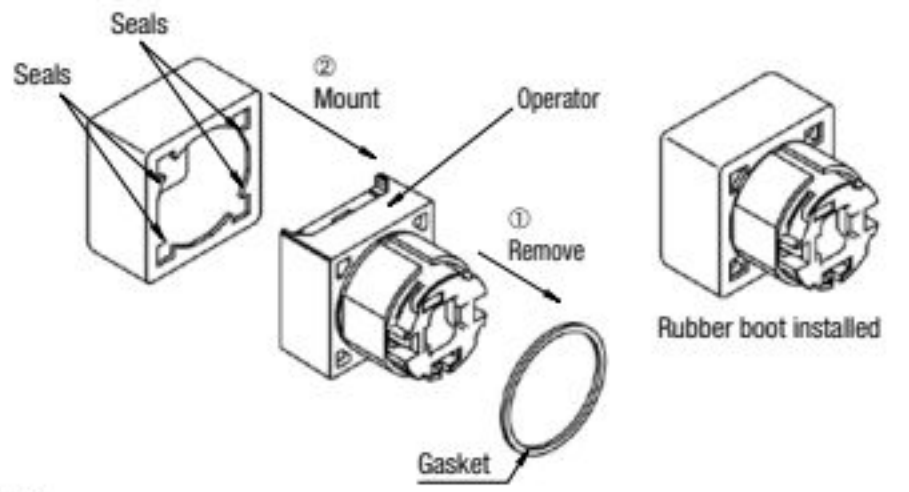

Round

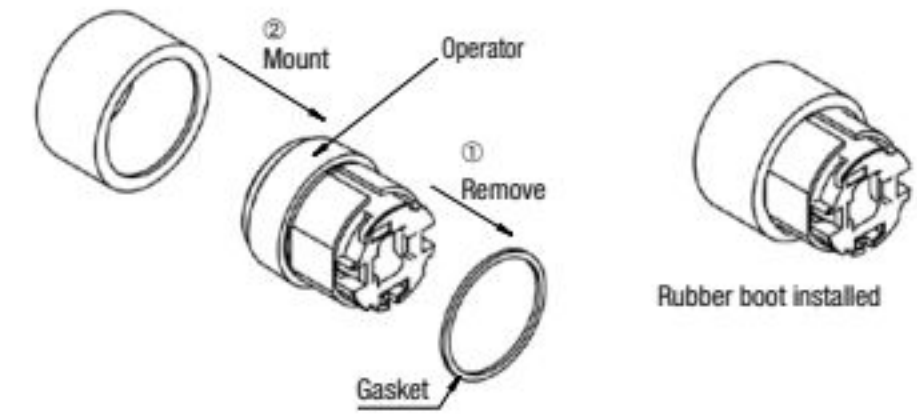

Flush Bezel

Mount the rubber boot so that the protrusion at the bottom surface of the operator fits with the recess on the operator, placing the rubber boot all around the operator sleeve.
Make sure that the protrusion on the rubber boot and the recess on the operator is properly fitted, otherwise, the waterproof and dustproof characteristics are not ensured.

How to Install the Rubber Boot

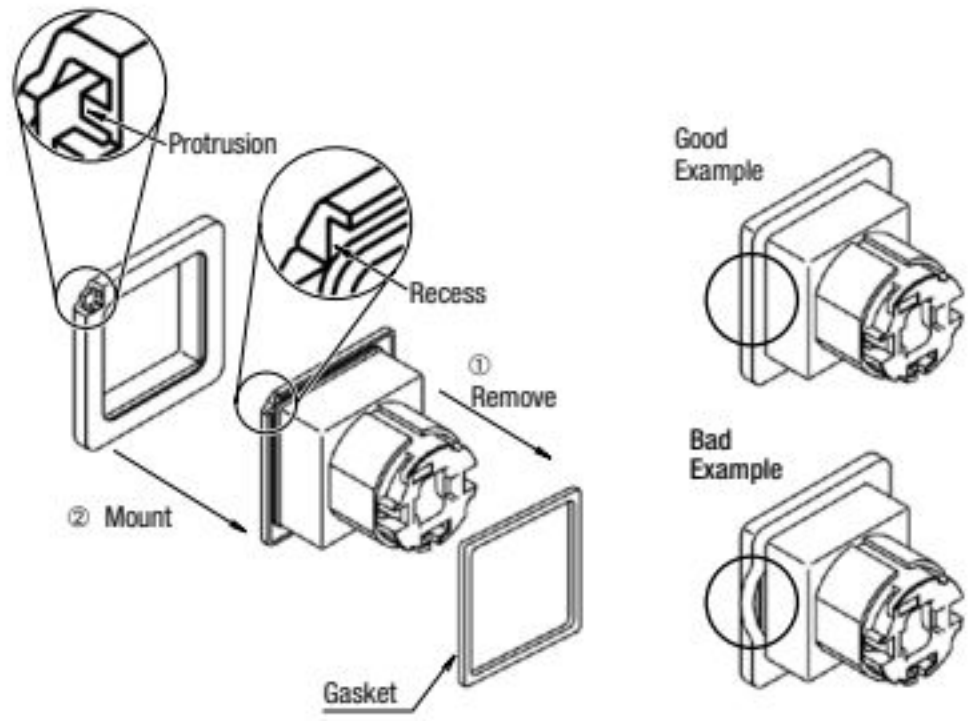

Note: Install the rubber boot before mounting the unit to the panel.

Maintained Pushbuttons

Observe the following instructions to prevent malfunction or damage.

- Do not stop halfway when operating pushbuttons or illuminated pushbuttons. Make sure to push the button fully.
- Do not replace the operator or lens unit with the pushbutton in a locked status.
- Do not remove the contact unit with the pushbutton in a locked status.
- Do not operate the pushbutton without the contact unit.

Pushbuttons and Illuminated Pushbuttons with Switch Guard

Do not apply force to the switch guard when the switch guard is not attached to a panel. When opening the switch guard, do not open more than 180°. The hinge may break.

Selector Switches

When turning the operator or key, make sure that they are properly turned to each position.

Selector Switches with Key

Observe the following instructions to prevent malfunction or damage.

- Insert the key to the bottom of the key hole.
- Do not remove the key from any key retained position.
- Besides the standard key (key number 0H), six other key numbers are available. Use a key of the matching number with the key cylinder. The standard key does not have a key number indication.
- Keys are available in two types.
  Key numbers 0H (standard), 1H, and 2H are reversible keys which can be inserted in two ways.
  Key numbers 3H, 4H, 5H, and 6H are non-reversible keys. Make sure of correct insertion direction.

For more information, visit http://eu.idec.com

Instructions

Countermeasures against Dim Lighting

Leakage currents through transistors or a contact protection circuit may cause the LED lamp to illuminate dimly even when the output is off.
When the LED lamp is illuminated by a transistor output, take the following measure.

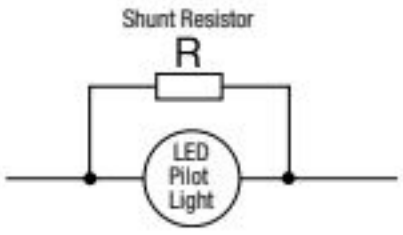

Leakage Current Shunt Resistor Allotment Table (Recommended)

Leakage Current Io	Shunt resistance R			
	Red (R), White (W)		Green (G)	
	Resistance	Rated Power	Resistance	Rated Power
0.1 mA max.	13kΩ	0.25W	18kΩ	0.25W
0.1 to 0.7 mA	2kΩ	0.25W	2.7kΩ	0.25W

Noise

LED elements deteriorate due to extraneous noise, resulting in significant decrease in luminance, hue change, or failure of lighting. When such effects are anticipated, take a protection measure shown below. However, measures may differ according to operating environment and condition

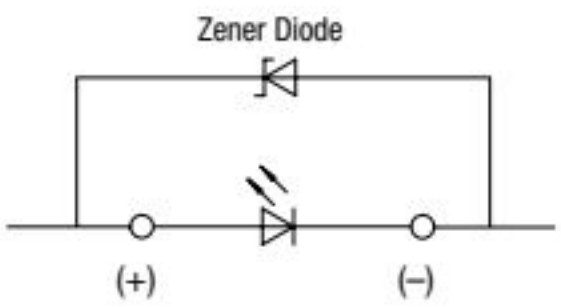

(Zener diode reference value)
Zener voltage: 4.3 to 4.7V

Static Electricity (UP Series)

UP series are delicate products that may be damaged by static electricity Make sure to take measures to prevent static electricity.

Switch Guards

Opening/closing the Switch Guard

When opening/closing the switch guard while the switch guard is not installed on a panel, make sure to hold the hinge. Holding the base might result in damage. Also do not apply force on the guard in other than open/close directions, otherwise the hinge may be damaged.

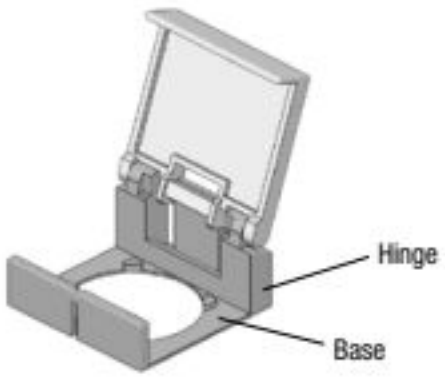

Rubber Gasket when using LB9Z-K2 Switch Guard (remains open) for Round/Square Units

Choose to use or not to use the rubber gasket for the switch referring to the conditions described below. Note that the degree of protection is IP40 with or without the rubber gasket.

- **When the panel thickness is up to 2.8mm**
  Install the switch onto the switch guard with rubber gasket, and mount on the panel.

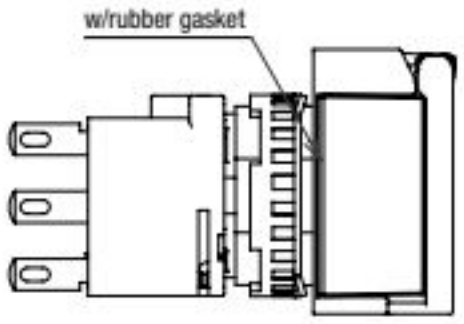

- **When the panel thickness is 2.8 to 3.2mm**
  Remove the rubber gasket from the switch and install the switch onto the switch guard, and mount on the panel (discard the rubber gasket).

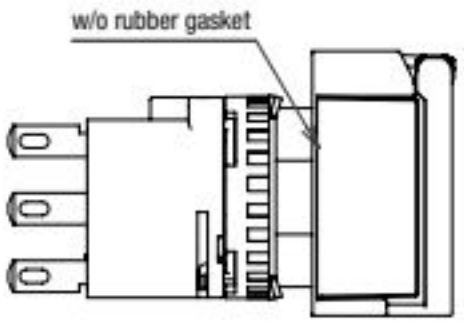

- **Single board mounting**
  Remove the rubber gasket from the switch and install the switch onto the switch guard, and mount on the panel (discard the rubber gasket).

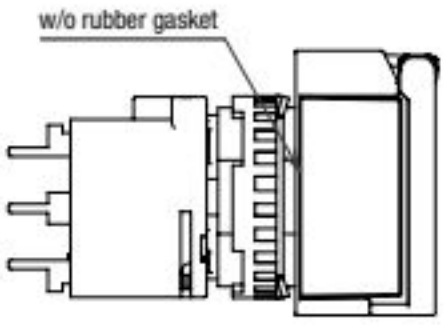

Download catalogs and CAD from http://eu.idec.com/downloads