New TWND Series — Full Size NEMA Pushbuttons

New! TWND Series: Heavy duty switches built to last

Key features:

- Variety of button sizes up to 2 9/16" (65mm)
- Rugged construction includes chrome plated zinc locking ring die cast zinc mounting thread
- 6 vibrant colors rendered by single long lasting white LED engine
- Transformer or full voltage
- Slow make, double break wiping contacts
- Modular construction for maximum flexibility
- Available assembled or as sub-components
- UL Type 4X, 13 and IP65 watertight/oiltight panel

The rugged series of TWND switches offers both variety and durability in an attractive design.

With button sizes up to 2 9/16" (65mm), chrome plated zinc locking rings, die cast zinc mounting threads, steel anti-rotation rings, and self cleaning contacts, the TWNDs are here to stay.

The TWND series also offers LED illumination in full voltage and transformer models.

Regardless of your switching needs, the NEW TWND series provides the kind of long lasting, industrial strength quality you've come to expect from IDEC.

UL Listed
File No. E68961

File No. LR21451

R 50363567

Certificate No.
2016010305902410

Specifications

Conforming to Standards	EN60947-5-1, UL508, CSA C22-2 No.14
Approvals	**CSA:** pushbuttons and selector switches: A600 pilot lights and illuminated pushbuttons, direct supply pilot lights and illuminated pushbuttons with integral transformer (100/110, 115, 120, 200/220, 230, 240, 380, 400/440, 480V) **UL:** pushbuttons and selector switches: A600 pilot lights and illuminated pushbuttons, direct supply pilot lights and illuminated pushbuttons with integral transformer (100/110, 115, 120, 200/220, 230, 240, 380, 400/440, 480V) **TÜV:** pushbuttons and selector switches: A600 pilot lights and illuminated pushbuttons, direct supply pilot lights and illuminated pushbuttons with integral transformer (100/110, 115, 120, 200/220, 230, 240, 380, 400/440, 480V)
Operating Temperature	Operation: –25 to +50°C (illuminated versions) -25 ~ +70C non-illuminated Storage: –40 to +80°C (without freezing) C-> °C
Vibration Resistance	5 to 55Hz, 98m/sec² (10g) conforming to IEC60068-2-6
Shock Resistance	980m/sec² (100g) conforming to IEC60068-2-27
Electric Shock Protection	Class 2 conforming to IEC60664-1
Degree of Protection	IP65 (from front of the panel) (conforming to IEC60529) UL Type 1, 2, 3, 3R, 3S, 4, 4X, 5, 12, 13 (conforming to NEMA ICS6-110)
Mechanical Life	Momentary pushbuttons: 5,000,000 (1800 operations per hour) All other switches: 500,000
Pollution Degree (conforming to IEC60947-1)	3

Mechanical-Electrical Specifications

Rated Operational Characteristics	AC-15: A600
Rated Insulation Voltage	600V
Rated Impulse Withstanding Voltage øDielectric Strength	Between live and dead metal parts 2.5kV AC, 1 minute
Rated Thermal Current	10 Amp
Minimum Switching Capacity	5 mA at 3V AC/DC (applicable range may vary with operating conditions and load types)
Contact Operation	Slow break NC or NO
Operating Force	Flush and extended pushbuttons—with 1NO or 1NC contact: 6.2±2N (momentary), 9.0±1.5N Additional contacts—1NO or 1NC: +3.0N

Recommended Terminal Torque

Unit		Wire	Number of Wires	Recommended Tightening Torque (Nm)	Terminal Screw
HW-U Contact Block	Crimping Terminal		2	1.0 to 1.3	M3.5
	Solid Wire	ø0.5 to 1.6 mm (AWG14 to 22)	2	1.0 to 1.3	
		ø1.7 to 2.0 mm (AWG12)	1	1.2 to 1.3	
	Stranded Wire	0.3 to 2.0 mm² (AWG14 to 22)	2	1.0 to 1.3	
		2.1 to 3.5 mm² (AWG12)	1	1.2 to 1.3	
Illuminated Unit (*1)	Crimping Terminal		2	1.0 to 1.3	M3.5
	Solid Wire	ø0.5 to 1.6 mm (AWG14 to 22)			
	Stranded Wire	0.3 to 2.0 mm (AWG14 to 22)			

Applicable Wire Size

Pilot Light				
	Crimping Terminal		2	0.6 to 1.0 (M3.0) 1.0 to 1.3 (M3.5)
	Solid Wire	ø0.5 to 1.6 mm (AWG14 to 22)		
	Stranded Wire	ø0.3 to 2.0 mm (AWG14 to 22)		

1. * refers to the lamp terminals of the illuminated push buttons and selector switches.

Contact Resistance	Initial contact resistance of 50mΩ or less
Contact Gap	4mm (NO and NC) 2mm (NO-EM and NC-LB)
LED Ratings	LEDs: 6V: 8mA, 12V: 11mA, 24V: 11mA, 120V: 8.8mA, 240V: 8.6mA
Contact Material	Silver

Contact Ratings

Contact Ratings by Utilization Category IEC 60947-5-1	AC-15 (A600)
	DC-13 (P600)

Contact Ratings by Utilization Category

Operational Voltage			24V	48V	50V	110V	220V	440V
Operation Current	AC 50/60 Hz	AC-12 Control of resistive loads & solid state loads	10A	—	10A	10A	6A	2A
		AC-15 Control of electromagnetic loads (> 72VA)	10A	—	7A	5A	3A	1A
	DC	DC-12 Control of resistive loads & solid state loads	10A	5A	—	2.2A	1.1A	—
		DC-13 Control of electromagnets	5A	2A	—	1.1A	0.6A	—

Non-Illuminated Pushbuttons (Assembled)

Assembled Pushbuttons

A B ( ) D 1 10 NU R

Function

B: Momentary
O: Maintained
V: Pushlock Turn Reset
Y: Push-Pull

Bezel Shape

Blank: Octagonal
F: Full Shroud
G: Mushroom Shroud
P: Neoprene Boot

Series Designation

D: TWND Series

Button Color

B: Black G: Green W:White
R: Red S: Blue Y: Yellow

Contact Arrangement

10: 1NO 01: 1NC
20: 2NO 02: 2NC
11: 1NO-1NC 22: 2NO-2NC

Button Shape

1: Flush
2: Extended
3: Mushroom ø 40mm
4: Jumbo Mushroom ø 65mm

1. Use only when interpreting part numbers. Do not use for developing part numbers.
2. Custom contact configurations available, contact IDEC for details.

Non-Illuminated Pushbuttons (Assembled)

Non-Illuminated Pushbuttons

Style		Contacts	Momentary	Maintained
Flush		1NO 1NC 1NO-1NC 2NO 2NC	ABD110NU① ABD101NU① ABD111NU① ABD120NU① ABD102NU①	AOD110NU① AOD101NU① AOD111NU① AOD120NU① AOD102NU①
Extended		1NO 1NC 1NO-1NC 2NO 2NC	ABD210NU① ABD201NU① ABD211NU① ABD220NU① ABD202NU①	AOD210NU① AOD201NU① AOD211NU① AOD220NU① AOD202NU①
Extended with Neoprene Boot[1]		1NO 1NC 1NO-1NC 2NO 2NC	ABPD210NU① ABPD201NU① ABPD211NU① ABPD220NU① ABPD202NU①	AOPD210NU① AOPD201NU① AOPD211NU① AOPD220NU① AOPD202NU①
Recessed		1NO 1NC 1NO-1NC 2NO 2NC	ABFD110NU① ABFD101NU① ABFD111NU① ABFD120NU① ABFD102NU①	AOFD110NU① AOFD101NU① AOFD111NU① AOFD120NU① AOFD102NU①
Extended with Full Shroud		1NO 1NC 1NO-1NC 2NO 2NC	ABFD210NU① ABFD201NU① ABFD211NU① ABFD220NU① ABFD202NU①	AOFD210NU① AOFD201NU① AOFD211NU① AOFD220NU① AOFD202NU①
ø 40mm Mushroom Head		1NO 1NC 1NO-1NC 2NO 2NC	ABD310NU① ABD301NU① ABD311NU① ABD320NU① ABD302NU①	AOD310NU① AOD301NU① AOD311NU① AOD320NU① AOD302NU①
ø 40mm Mushroom Head with Full Shroud		1NO 1NC 1NO-1NC 2NO 2NC	ABGD310NU① ABGD301NU① ABGD311NU① ABGD320NU① ABGD302NU①	AOGD310NU① AOGD301NU① AOGD311NU① AOGD320NU① AOGD302NU①
ø 65mm Jumbo Mushroom Head		1NO 1NC 1NO-1NC 2NO 2NC	ABD410NU① ABD401NU① ABD411NU① ABD420NU① ABD402NU①	AOD410NU① AOD401NU① AOD411NU① AOD420NU① AOD402NU①
ø 65mm Jumbo Mushroom Head with Shallow Shroud		1NO 1NC 1NO-1NC 2NO 2NC	ABGD410NU① ABGD401NU① ABGD411NU① ABGD420NU① ABGD402NU①	AOGD410NU① AOGD401NU① AOGD411NU① AOGD420NU① AOGD402NU①
ø 65mm Jumbo Mushroom Head With Deep Shroud		1NO 1NC 1NO-1NC 2NO 2NC	ABFD410NU① ABFD401NU① ABFD411NU① ABFD420NU① ABFD402NU①	AOFD410NU① AOFD401NU① AOFD411NU① AOFD420NU① AOFD402NU①

1. In place of ①, specify the Button Color Code.
2. For sub-assembly part numbers, see next page.
4. [1]Neoprene boot available only in Black (B), Green (G), Red (R) and Yellow (Y).

① Button Color Codes

Color	Code
Black	B
Green	G
Red	R
Blue	S
Yellow	Y
White	W

1. 65mm Jumbo mushroom not available in white.
2. Neoprene boot is not available in blue or white.

Non-Illuminated Pushbuttons (Sub-Assembled)

Contact Block	+	Operator	+	Button	=	Complete Part

Operators

Style		Part Number	
		Momentary	Maintained
Flush/Extended		ABD1200T8	AOD1200T8
Extended with Full Shroud		ALFD2300T8	AOLFD2300T8
ø 40mm Mushroom/ø 65mm Jumbo Mushroom		ABD3400T8	AOD3400T8
ø 40mm Mushroom with Full Shroud		ABGD-300T	AOGD-300T
ø 65mm Jumbo Mushroom with Shallow Shroud		ABGD-400T	AOGD-400T
ø 65mm Jumbo Mushroom with Deep Shroud		ABFD-400T	AOFD-400T

Buttons and Lenses

Style		Part Number
Flush		ABD1BN-①
Extended		ABD2BN-①
ø 40mm Mushroom		ABD3BN-①
ø 65mm Jumbo Mushroom		ABD4BN-①

In place of ①, specify the Button Color Code. (See table previous page)

Contact Blocks

Style		Part Number	
		1NO	1NC
All Control Units		HW-U10-F HW-U10R-F (early make)	HW-U01-F HW-U01R-F (late break)
Dummy Block		HW-DB	

1. Dummy blocks (no contacts) are used with an odd number of contact blocks.
2. Combining HW-U10R-F and HW-U01R-F result in overlapping contacts (remain on, or closed, when switch is moved between two positions).

Stop Switches (Assembled)

Assembled Stop Switches

A V (L) D 3 22 11 D NU R

Function

V:Pushlock Turn Reset
Y:Push-Pull

Illumination

Blank: None
L: Illuminated

Series Designation

D: TWND Series

Button/Lens Size

3: 40mm Mushroom

Illumination Circuit

Full Voltage:

66: 6VAC/DC

11: 12VAC/DC

22: 24AC/DC

QH2: 120VAC/DC

QM4: 240VAC

Transformer:

126: 120VAC step down transformer

246: 240VAC step down transformer

486: 480VAC step down transformer

Button/Lens Color Code

A: Amber
G: Green
R: Red
S: Blue
W: White
Y: Yellow

(illuminated units only)

D: LED

Contact Arrangement

10: 1NO	01: 1NC
20: 2NO	02: 2NC
11: 1NO-1NC	22: 2NO-2NC

1. Use only when interpreting part numbers. Do not use for developing part numbers.
2. Custom contact configurations available, contact IDEC for details.

Stop Switches (Assembled)

Stop Switches

Style		Contacts	Part Number
ø 40mm Pushlock Turn Reset	Non-Illuminated	1NO 1NC 1NO-1NC 2NO 2NC	AVD310NUR* AVD301NUR* AVD311NUR* AVD320NUR* AVD302NUR*
ø 40mm Illuminated Pushlock Turn Reset	Full Voltage	1NO-1NC 2NO 2NC	AVLD3③11DNUR* AVLD3③20DNUR* AVLD3③02DNUR*
	Transformer	1NO-1NC 2NO 2NC	AVLD3 ④ 11DNUR* AVLD3 ④ 20DNUR* AVLD3 ④ 02DNUR*
ø 40mm Push-Pull	Non-Illuminated	1NO 1NC 1NO-1NC 2NO 2NC	AYD310NU① AYD301NU① AYD311NU① AYD320NU① AYD302NU①
ø 40mm Illuminated Push-Pull	Full Voltage	1NO-1NC 2NO 2NC	AYLD3③11DNU② ** AYLD3③20DNU② ** AYLD3③02DNU② **
	Transformer	1NO-1NC 2NO 2NC	AYLD3 ④ 11DNU② ** AYLD3 ④ 20DNU② ** AYLD3 ④ 02DNU② **

1. In place of ①, specify the button color code
2. In place of ②, specify the lens color code.
3. In place of ③, specify the Full Voltage (lamp voltage) Code.
4. * Only available in red.
5. In place of ④, specify the transformer voltage code.
6. **Not available in blue.
7. For sub-assembly part numbers, see next page.
8. For nameplates and accessories, see page 825 and page 823.
9. For dimensions, see page 828.

① Button Color Codes

Color	Code
Black	B
Green	G
Red	R
Blue	S
Yellow	Y

② Lens Color Codes

Color	Code
Amber	A
Green	G
Red	R
Blue	S
White	W
Yellow	Y

③ Full Voltage Codes

Voltage	Code
6V AC/DC	66
12V AC/DC	11
24V AC/DC	22
120V AC	QH2
240V AC	QM4

④ Transformer Voltage Codes

Voltage	Code
120VAC	126
240VAC	246
480VAC	486

Transformers step down to 6V.

Stop Switches (Sub-Assembled)

Transformer*	+	Operator	+	LED	+	Button/Lens	=	Complete Part

* Not required for full voltage units.

Operators

Style		Part Number
ø40mm Illuminated and Non-illuminated Pushlock Turn Reset		AVD000T8
ø 40mm Illuminated and Non-illuminated Push-Pull		AYD000T8

Buttons and Lenses

Style		Part Number
Button for Pushlock Turn Reset Stop Switches (ø40mm, red only)		AVN3B-R
Lens for Illuminated Pushlock Turn Reset Stop Switches (ø40mm, red only)		AVLN3LD-R-K
Button for Push-Pull Stop Switches (ø40mm)		AYD3BN-①
Lens for Illuminated Push-Pull Stop Switches (ø40mm)	2 pos*	AYLD3LD-②-K

1. In place of ①, specify the Button Color Code. (See table below)
2. In place of ②, specify the lens Color Code.
3. *Not available in blue.

Lamp Circuit Components

Style	Application	Part Number
Long Lamp Holder	**Used with** Full-size Transformer and two contact blocks **Used with** Full Voltage Adaptor and two contact blocks	TW-LH2
Lead Holder	**Used with** TW-LH2 holder when using four contact blocks	HW-LH3

LEDs

Style	Voltage	Part Number
LED	6V AC/DC	LSRD-6
	12V AC/DC	LSRD-1
	24V AC/DC	LSRD-2
	120V AC/DC	LSRD-H2
	240V AC	LSRD-M4

1. In place of ②, specify the lens color code.
2. The LED contains a current-limiting resistor and a protection diode.

① Button Color Codes

Color	Code
Black	B
Green	G
Red	R
Blue	S
Yellow	Y

② Lens Color Codes

Color	Code
Amber	A
Green	G
Red	R
Blue	S
White	W

Contact Blocks

Style		Part Number 1NO	Part Number 1NC
All Control Units		HW-U10-F HW-U10R-F (early make)	HW-U01-F HW-U01R-F (late break)
Dummy Block		HW-DB	

1. Dummy blocks (no contacts) are used with an odd number of contact blocks.
2. Combining HW-U10R-F and HW-U01R-F result in overlapping contacts.

Transformers

Style	Primary Voltage (50/60Hz)	Part Number
	120V AC	TW-F126B
	240V AC	TW-F246B
	480V AC	TW-F486B

6V secondary voltage (uses 6V LED).

Full Voltage Modules

Style			Description	Part Number
Dummy Block with Full Voltage Adaptor		For use with odd number of contacts.	Finger-Safe	HW-DA1FBN
Full Voltage Adaptor		For use with even number of contacts.	Finger-Safe	TW-DA1FB

All Transformers step down to 6V (use 6V lamp).

Pilot Lights (Assembled)

Assembled Pilot Lights

A P D 1 126 D NU R

Function
P: Pilot Light

Series Designation
D: TWND Series

Lens Shape
1: Dome

Rated Operational Voltage (Primary)

Transformer Type	Full Voltage Type
126: 120V AC	66: 6VAC/DC
246: 240V AC	11: 12VAC/DC
486: 480V AC	22: 24VAC/DC
	QH2: 120VAC/DC
	QM4: 240VAC

Lens Color Code
A: Amber
G: Green
R: Red
S: Blue
W: White
Y: Yellow

D: LED

Use only when interpreting part numbers. Do not use for developing part numbers.

LED Pilot Lights

Style	Operating Voltage	Part Number LED
Transformer Dome	120V AC 240V AC 480V AC	APD1126DNU② APD1246DNU② APD1486DNU②
Full Voltage Dome	—	APD1③DNU②

1. In place of ②, specify the Lens/LED Color Code.
2. In place of ③, specify the Full Voltage Code (LED voltage).
3. Yellow pilot light comes with white LED.

② Lens Color Codes

Color	Code
Amber	A
Green	G
Red	R
Blue	S
White	W
Yellow	Y

③ Full Voltage Codes

Voltage	Code
6V AC/DC	66
12V AC/DC	11
24V AC/DC	22
120V AC/DC	QH2
240V AC	QM4

Pilot Lights (Sub-Assembled)

Transformer*	+	Operator	+	LED	+	Lens	=	Complete Part

* Not required for full voltage units.

One Each from Left Column	plus	One Selection from Right Column

Operators

Style		Part Number
Transformer or FULL Voltage		APD09ST8

Lenses

Style		Part Number
Dome Lens		APN106LN-②-K

1. In place of ②, specify the Lens Color Code.

LEDs

Style		Voltage	Part Number
LED		6V AC/DC	LSRD-6
		12V AC/DC	LSRD-1
		24V AC/DC	LSRD-2
		120V AC/DC	LSRD-H2
		240V AC	LSRD-M4

1. In place of ②, specify the lens color code.
2. The LED contains a current-limiting resistor and a protection diode.

Full Voltage Clips

Primary Voltage (50/60Hz)	Part Number
	APD-F

Required for all full voltage models. Two pieces each.
2 clips required for full voltage pilot lights

Transformers (only for Pilot Lights)

Style	Primary Voltage (50/60Hz)	Part Number	
LED		120V AC	TWD-0126
		240V AC	TWD-0246
		480V AC	TWD-0486

6V secondary voltage (use 6V lamp).

② Lens Color Codes

Color	Code
Amber	A
Green	G
Red	R
Blue	S
White	W
Yellow	Y

Illuminated Pushbuttons (Assembled)

Assembled Illuminated Pushbuttons

A L ( ) D 2 126 11 D NU R

Function

L: Momentary Action
OL: Maintained Action

Bezel Shape

Blank: Octagonal
F: Full Shroud

Series Designation

D: TWND Series

Lens Shape

2: Extended
3: Mushroom ø 40mm

Rated Operational Voltage (Primary)

Transformer Type	Full Voltage Type
126: 120V AC	66: 6VAC/DC
246: 240V AC	11: 12VAC/DC
486: 480V AC	22: 24VAC/DC
	QH2: 120VAC/DC
	QM4: 240VAC

Lens Color Code

A: Amber
G: Green
R: Red
S: Blue
W: White
Y: Yellow

D: LED

Contact Arrangement

20: 2NO 02: 2NC
11: 1NO-1NC

1. Use only when interpreting part numbers. Do not use for developing part numbers.
2. All transformers step down to 6V.

Illuminated Pushbuttons (Assembled)

Illuminated Pushbuttons

Style		Contacts	Part Number	
			Momentary	Maintained
Extended Lens	Full Voltage	1NO-1NC 2NO 2NC	ALD2③11DNU② ALD2③20DNU② ALD2③02DNU②	AOLD2③11DNU② AOLD2③20DNU② AOLD2③02DNU②
	Transformer	1NO-1NC 2NO 2NC	ALD2 ④ 11DNU② ALD2 ④ 20DNU② ALD2 ④ 02DNU②	AOLD2 ④ 11DNU② AOLD2 ④ 20DNU② AOLD2 ④ 02DNU②
Extended Lens with Full Shroud	Full Voltage	1NO-1NC 2NO 2NC	ALFD2③11DNU② ALFD2③20DNU② ALFD2③02DNU②	AOLFD2③11DNU② AOLFD2③20DNU② AOLFD2③02DNU②
	Transformer	1NO-1NC 2NO 2NC	ALFD2 ④ 11DNU② ALFD2 ④ 20DNU② ALFD2 ④ 02DNU②	AOLFD2 ④ 11DNU② AOLFD2 ④ 20DNU② AOLFD2 ④ 02DNU②
ø 40mm Mushroom Lens	Full Voltage	1NO-1NC 2NO 2NC	ALD3③11DNU② ALD3③20DNU② ALD3③02DNU②	AOLD3③11DNU② AOLD3③20DNU② AOLD3③02DNU②
	Transformer	1NO-1NC 2NO 2NC	ALD3 ④ 11DNU② ALD3 ④ 20DNU② ALD3 ④ 02DNU②	AOLD3 ④ 11DNU② AOLD3 ④ 20DNU② AOLD3 ④ 02DNU②

1. In place of ②, specify the Lens Color Code.
2. In place of ③, specify the Full Voltage Code (LED voltage).
3. In place of ④, specify the Transformer Voltage Code.
4. Light is independent of switch position.
5. Yellow pushbutton comes with white LED only.

② Lens Color Codes

Color	Code
Amber	A
Green	G
Red	R
Blue	S
White	W
Yellow	Y

③ Full Voltage Codes

Voltage	Code
6V AC/DC	66
12V AC/DC	11
24V AC/DC	22
120V AC/DC	QH2
240V AC	QM4

④ Transformer Voltage Codes

Voltage	Code
120VAC	126
240VAC	246
480VAC	486

6V secondary voltage (uses 6V LED).

Illuminated Pushbuttons (Sub-Assembled)

Transformer*	+	Contact Block	+	Operator	+	LED	+	Lens	=	Complete Part

*Not required for full voltage types.

Operators

Style		Part Number	
		Momentary	Maintained
Extended		ALD2300T8	AOLD2300T8
Extended with Full Shroud		ALFD2300T8	AOLFD2300T8
40mm Mushroom		ALD2300T8	AOLD2300T8

Lenses

Style		Part Number
Extended		ALN06LU-②-K
ø 40mm Mushroom		ALN3LU-②-K

In place of ②, specify the Lens Color Code.

Lamp Circuit Components

Style	Application	Part Number
Long Lamp Holder	**Used with** Full-size Transformer and two contact blocks **Used with** Full Voltage Adaptor and two contact blocks	TW-LH2
Lead Holder	**Used with** TW-LH2 holder when using four contact blocks	HW-LH3

LEDs

Style	Voltage	Part Number
LED	6V AC/DC	LSRD-6
	12V AC/DC	LSRD-1
	24V AC/DC	LSRD-2
	120V AC/DC	LSRD-H2
	240V AC	LSRD-M4

1. In place of ②, specify the lens color code.
2. The LED contains a current-limiting resistor and a protection diode.

② Lens Color Codes

Color	Code
Amber	A
Green	G
Red	R
Blue	S
White	W
Yellow	Y

Contact Blocks

Style		Part Number	
		1NO	1NC
All Control Units		HW-U10-F HW-U10R-F (early make)	HW-U01-F HW-U01R-F (late break)
Dummy Block		HW-DB	

1. Dummy blocks (no contacts) are used with an odd number of contact blocks.
2. Combining HW-U10R-F and HW-U01R-F result in overlapping contacts (remain on, or closed, when switch is moved between two positions).

Transformers

Style		Primary Voltage (50/60Hz)	Part Number
Transformers		120V AC	TW-F126B
		240V AC	TW-F246B
		480V AC	TW-F486B

6V secondary voltage (use 6V LED).

Full Voltage Modules

Style			Description	Part Number
Dummy Block with Full Voltage Adaptor		For use with odd number of contacts.	Finger-Safe	HW-DA1FBN
Full Voltage Adaptor		For use with even number of contacts.	Finger-Safe	TW-DA1FB

All Transformers step down to 6V (use 6V lamp).

Non-Illuminated Selector Switches (Assembled)

Assembled Selector Switches

A S D 2 ( ) ( ) 11 NU – ( )

Function

S: Selector Switch

Series Designation

D: TWND Series

Number of Positions

2: 2-Position
3: 3-Position

Spring Return Action

Blank: Maintained
1: Spring return from Right
2: Spring return from Left
3: 2-Way spring return from Left and Right

Circuit Number

(See Circuit # column of Selector Switch Contact Arrangement Chart on beginning on page 820.)

Contact Arrangement Code

10: 1NO	01: 1NC
20: 2NO	02: 2NC
40: 4NO	04: 4NC
11: 1NO-1NC	22: 2NO-2NC

Operator Style Code

Blank: Knob Operator
L: Lever Operator
K: Key Operator

1. Use only when interpreting part numbers. Do not use for developing part numbers.
2. Custom key removal codes available. Please contact IDEC for details.

Non-Illuminated Selector Switches (Assembled)

Non-Illuminated 2-Position Selector Switches

Style					Part Number		
Contact	Mounting	Operator Position L	Operator Position R		Maintained	Spring Return from Right	Spring Return from Left
1NO	1 2	O O	X O	Knob Lever Key	ASD210NU ASD2L10NU ASD2K10NU	ASD2110NU ASD21L10NU ASD21K10NU	ASD2210NU ASD22L10NU ASD22K10NU
1NC	1 2	X O	O O	Knob Lever Key	ASD201NU-116 ASD2L01NU-116 ASD2K01NU-116	ASD2101NU-116 ASD21L01NU-116 ASD21K01NU-116	ASD2201NU-116 ASD22L01NU-116 ASD22K01NU-116
1NO 1NC	1 2	O X	X O	Knob Lever Key	ASD211NU ASD2L11NU ASD2K11NU	ASD2111NU ASD21L11NU ASD21K11NU	ASD2211NU ASD22L11NU ASD22K11NU
2NO	1 2	O O	X X	Knob Lever Key	ASD220NU ASD2L20NU ASD2K20NU	ASD2120NU ASD21L20NU ASD21K20NU	ASD2220NU ASD22L20NU ASD22K20NU
2NC	1 2	X X	O O	Knob Lever Key	ASD202NU-104 ASD2L02NU-104 ASD2K02NU-104	ASD2102NU-104 ASD21L02NU-104 ASD21K02NU-104	ASD2202NU-104 ASD22L02NU-104 ASD22K02NU-104
2NO 2NC	1 2 3 4	O X O X	X O X O	Knob Lever Key	ASD222NU ASD2L22NU ASD2K22NU	ASD2122NU ASD21L22NU ASD21K22NU	ASD2222NU ASD22L22NU ASD22K22NU
2NO 2NC	1 2 3 4	O O X X	X X O O	Knob Lever Key	ASD222NU-111 ASD2L22NU-111 ASD2K22NU-111	ASD2122NU-111 ASD21L22NU-111 ASD21K22NU-111	ASD2222NU-111 ASD22L22NU-111 ASD22K22NU-111

1. The truth table indicates the operating position of contact block when the operator is switched to that position.
   X = On (closed contacts) O = Off (open contacts)
   X⟷X = Overlapping Contacts: Remain on (closed contacts) when switch is moved between these two positions.
2. All knob and lever selector switches come in black. Other colors are available by ordering the knob or lever separately.
3. Custom contact arrangements available, see page 820.

Non-Illuminated 3-Position Selector Switches

Style						Part Number			
Contact	Mounting	Operator Position L	Operator Position C	Operator Position R		Maintained	Spring Return from Right	Spring Return from Left	Spring Return Two-Way
2NO	1 2	X O	O O	O X	Knob Lever Key	ASD320NU ASD3L20NU ASD3K20NU	ASD3120NU ASD31L20NU ASD31K20NU	ASD3220NU ASD32L20NU ASD32K20NU	ASD3320NU ASD33L20NU ASD33K20NU
2NC	1 2	O X	X⟷X	X⟷X O	Knob Lever Key	ASD302NU ASD3L02NU ASD3K02NU	ASD3102NU ASD31L02NU ASD31K02NU	ASD3202NU ASD32L02NU ASD32K02NU	ASD3302NU ASD33L02NU ASD33K02NU
2NO 2NC	1 2 3 4	X O O X⟷X	O O X⟷X	O X X⟷X O	Knob Lever Key	ASD322NU ASD3L22NU ASD3K22NU	ASD3122NU ASD31L22NU ASD31K22NU	ASD3222NU ASD32L22NU ASD32K22NU	ASD3322NU ASD33L22NU ASD33K22NU
2NO 2NC	1 2 3 4	X X⟷X O O	O X⟷X X O	X O O X	Knob Lever Key	ASD322NU-309 ASD3L22NU-309 ASD3K22NU-309	ASD3122NU-309 ASD31L22NU-309 ASD31K22NU-309	ASD3222NU-309 ASD32L22NU-309 ASD32K22NU-309	ASD3322NU-309 ASD33L22NU-309 ASD33K22NU-309
2NO 2NC	1 2 3 4	O O O O	X O X O	O X O X	Knob Lever Key	ASD322NU-310 ASD3L22NU-310 ASD3K22NU-310	ASD3122NU-310 ASD31L22NU-310 ASD31K22NU-310	ASD3222NU-310 ASD32L22NU-310 ASD32K22NU-310	ASD3322NU-310 ASD33L22NU-310 ASD33K22NU-310
4NO	1 2 3 4	X O X O	O O O O	O X O X	Knob Lever Key	ASD340NU ASD3L40NU ASD3K40NU	ASD3140NU ASD31L40NU ASD31K40NU	ASD3240NU ASD32L40NU ASD32K40NU	ASD3340NU ASD33L40NU ASD33K40NU
4NC	1 2 3 4	O X⟷X O X⟷X	X⟷X X⟷X X⟷X X⟷X	X⟷X O X⟷X O	Knob Lever Key	ASD304NU ASD3L04NU ASD3K04NU	ASD3104NU ASD31L04NU ASD31K04NU	ASD3204NU ASD32L04NU ASD32K04NU	ASD3304NU ASD33L04NU ASD33K04NU

Non-Illuminated Selector Switches (Sub-Assembled)

Contact Blocks	+	Operator	+	Knob or Lever*	+	Color Insert*	=	Complete Part[1]

1. *Not needed with key type switches.
2. [1]Knob type shown.

Operators

Style	Position	Description	Part Number
Knob/Lever	2	Maintained	ASD0201T8
		Spring return from right	ASD0213T8
		Spring return from left	ASD0224T8
	3	Maintained, Cam 1 Maintained, Cam 2	ASD0302T8 ASD0306T8
		Spring return from right, Cam 1 Spring return from right, Cam 2	ASD0314T8 ASD0310T8
		Spring return from left, Cam 1 Spring return from left, Cam 2	ASD0323T8 ASD0328T8
		Spring return from left/right, Cam 1 Spring return from left/right, Cam 2	ASD0335T8 ASD0339T8
Key	2	Maintained	ASD0201KT8
		Spring return from right	ASD0213KT8
		Spring return from left	ASD0224KT8
	3	Maintained, Cam 1 Maintained, Cam 2	ASD0302KT8 ASD0306KT8
		Spring return from right, Cam 1 Spring return from right, Cam 2	ASD0302KT8B ASD0310KT8B
		Spring return from left, Cam 1 Spring return from left, Cam 2	ASD0323KT8 ASD0310KT8B
		Spring return from left/right, Cam 1 Spring return from left/right, Cam 2	ASD0335KT8 ASD3K339KT8

1. Order knobs, levers, color inserts separately (see below).
2. For key switches, keys are removable in all maintained positions. Other options available, contact IDEC for details.
3. See page 822 "Operator Truth Tables" for details of difference between cams.

① Color Codes

Knob/Lever Color	Code
Black	B
Blue	S
Green	G
Red	R
Yellow	Y
White	W

1. Knob/Lever not available in white.
2. Color inserts not available in Black.
3. Lever not available in yellow.

Handles and Inserts

Style		Part Number
Knob		ASDHHY-①
Lever		ASDHHL-①*
Color Insert		TW-HC1-①

1. In place of ①, specify the Color Code.
*Not available in yellow.

Contact Blocks

Style		Part Number	
		1NO	1NC
All Control Units		HW-U10-F HW-U10R-F (early make)	HW-U01-F HW-U01R-F (late break)
Dummy Block		HW-DB	

1. Dummy blocks (no contacts) are used with an odd number of contact blocks.
2. Combining HW-U10R-F and HW-U01R-F result in overlapping contacts (remain on, or closed, when switch is moved between two positions).

Illuminated Selector Switches (Assembled)

Assembled Illuminated Selector Switches

A SL D 2 (2) 22 11 DN U – 111 – R

Function

SL:Illuminated Selector Switch

Series Designation

D: TWND series

Number of Positions

2: 2-Position
3: 3-Position

Spring Return Action

Blank: Maintained
1: Spring return from Right
2: Spring return from Left
3: Two-Way spring return from Left and Right

Rated Operational Voltage (Primary)

Transformer Type	Full Voltage Type
136: 120V AC	66: 6VAC/DC
256: 240V AC	11: 12VAC/DC
486: 480V AC	22: 24VAC/DC
	QH2: 120VAC/DC
	QM4: 240VAC

Contact Arrangement Code

20: 2NO	02: 2NC
40: 4NO	04: 4NC
11: 1NO-1NC	22: 2NO-2NC

Lens Color Code

A: Amber
G: Green
R: Red
S: Blue
W: White
Y: Yellow

Circuit Code Number

See Circuit # column of Selector Switch Contact Arrangement Charts on page 820.

D: LED Lamp

Use only when interpreting part numbers. Do not use for developing part numbers.

Illuminated Selector Switches (Assembled)

Illuminated 2-Position Selector Switches

Style					Part Number		
Contact	Mounting	Operator Position L	Operator Position R	Lamp Circuit Type	Maintained	Spring Return from Right	Spring Return from Left
1NO 1NC	1 2	O X	X O	Transformer Full Voltage	ASLD2 ④11DNU②-104 ASLD2③11DNU②	ASLD21 ④11DNU② ASLD21③11DNU②	ASLD22 ④11DNU② ASLD22③11DNU②
2NO	1 2	O O	X X	Transformer Full Voltage	ASLD2 ④20DNU② ASLD2③20DNU②	ASLD21 ④20DNU② ASLD21③20DNU②	ASLD22 ④20DNU② ASLD22③20DNU②
2NC	1 2	X X	O O	Transformer Full Voltage	ASLD2 ④02DNU-104-② ASLD2③02DNU-104-②	ASLD21 ④02DNU-104-② ASLD21③02DNU-104-②	ASLD22 ④02⑤DNU-104-② ASLD22③02DNU-104-②
2NO 2NC	1 2 3 4	O X O X	X O X O	Transformer Full Voltage	ASLD2 ④22DNU② ASLD2③22DNU②	ASLD21 ④22DNU② ASLD21③22DNU②	ASLD22 ④22DNU② ASLD22③22DNU②
2NO 2NC	1 2 3 4	O O X X	X X O O	Transformer Full Voltage	ASLD2 ④22DNU-111-② ASLD2③22DNU-111-②	ASLD21 ④22DNU-111-② ASLD21③22DNU-111-②	ASLD22 ④22DNU-111-② ASLD22③22DNU-111-②

② Lens Color Codes

Color	Code
Amber	A
Green	G
Red	R
Blue	S
White	W
Yellow	Y

③ Full Voltage Codes

Voltage	Code
6V AC/DC	66
12V AC/DC	11
24V AC/DC	22
120V AC	QH2
240V AC	QM4

Illuminated 3-Position Selector Switches, Maintained and Spring Return

Style						Part Number			
Contact	Mounting	Operator Position L	Operator Position C	Operator Position R	Lamp Circuit Type	Maintained	Spring Return From Right	Spring Return from Left	Spring Return Two-Way
2NO	1 2	X O	O O	O X	Transformer Full Voltage	ASLD3 ④ 20DNU② ASLD3③20DNU②	ASLD31 ④ 20DNU② ASLD31③20DNU②	ASLD32 ④ 20DNU② ASLD32③20DNU②	ASLD33 ④ 20DNU② ASLD33③20DNU②
2NC	1 2	O X	X X	X O	Transformer Full Voltage	ASLD3 ④ 02DNU② ASLD3③02DNU②	ASLD31 ④ 02DNU② ASLD31③02DNU②	ASLD32 ④ 02DNU② ASLD32③02DNU②	ASLD33 ④ 02DNU② ASLD33③02DNU②
2NO 2NC	1 2 3 4	X O O X	O O X X	O X X O	Transformer Full Voltage	ASLD3 ④ 22DNU② ASLD3③22DNU②	ASLD31 ④ 22DNU② ASLD31③22DNU②	ASLD32 ④ 22DNU② ASLD32③22DNU②	ASLD33 ④ 22DNU② ASLD33③22DNU②
2NO 2NC	1 2 3 4	X X O O	O X X O	X O O X	Transformer Full Voltage	ASLD3 ④ 22DNU-309-② ASLD3③22DNU-309-②	ASLD31 ④ 22DNU-309-② ASLD31③22⑤DNU-309-②	ASLD32 ④ 22DNU-309-② ASLD32③22DNU-309-②	ASLD33 ④ 22DNU-309-② ASLD33③22DNU-309-②
2NO 2NC	1 2 3 4	O O O O	X O X O	O X O X	Transformer Full Voltage	ASLD3 ④ 22DNU-310-② ASLD3③22DNU-310-②	ASLD31 ④ 22DNU-310-② ASLD31③22DNU-310-②	ASLD32 ④ 22DNU-310-② ASLD32③22DNU-310-②	ASLD33 ④ 22DNU-310-② ASLD33③22DNU-310-②
4NO	1 2 3 4	X O X O	O O O O	O X O X	Transformer Full Voltage	ASLD3 ④ 40DNU② ASLD3③40DNU②	ASLD31 ④ 40DNU② ASLD31③40DNU②	ASLD32 ④ 40DNU② ASLD32③40DNU②	ASLD33 ④ 40DNU② ASLD33③40DNU②
4NC	1 2 3 4	O X O X	X X X X	X O X O	Transformer Full Voltage	ASLD3 ④ 04DNU② ASLD3③04DNU②	ASLD31 ④ 04DNU② ASLD31③04DNU②	ASLD32 ④ 04DNU② ASLD32③04DNU②	ASLD33 ④ 04DNU② ASLD33③04DNU②

1. In place of ②, specify the Lens/LED Color Code, in place of ③, specify the Full Voltage (LED voltage) Code, in place of ④, specify the Transformer Voltage Code.
2. The truth table indicates the operating position of contact block when the operator is switched to that position.
   X = On (Closed Contacts) O = Off (Open Contacts)
   X—X = Overlapping Contacts: Remain on (closed contacts) when switch is moved between these positions
3. Yellow selector switch comes with white LED.

④ Transformer Voltage Codes

Voltage	Code
120VAC	136
240VAC	256
480VAC	486

Transformers step down to 6V (use 6V LED).

Illuminated Selector Switches (Sub-Assembled)

Transformer* + Contact Block + Operator + LED + Lens = Complete Part

*Not required for full voltage units.

Operators

Style	Position	Description	Part Number
Operator	2	Maintained	ASLD0201T8
	3	Maintained, Cam 1 Maintained, Cam 2	ASLD0302T8 ASLD0306T8
	2	Spring return from right	ASLD0213T8
		Spring return from left	ASLD0224T8
	3	Spring return from right, Cam 1 Spring return from right, Cam 2	ASLD0314T8 ASLD0310T8
		Spring return from left, Cam 1 Spring return from left, Cam 2	ASLD0323T8 ASLD0328T8
		Spring return from left/right, Cam 1 Spring return from left/right, Cam 2	ASLD0335T8 ASLD0339T8

Lenses

Style		Part Number
Knob		ASLNHU-②-K

Lamps

Style	Voltage	Part Number
LED	6V AC/DC	LSRD-6
	12V AC/DC	LSRD-1
	24V AC/DC	LSRD-2
	120V AC/DC	LSRD-H2
	240V AC	LSRD-M4

1. In place of ②, specify the lens color code.
2. The LED contains a current-limiting resistor and a protection diode.

Contact Blocks

Style		Part Number 1NO	Part Number 1NC
All Control Units		HW-U10-F HW-U10R-F (early make)	HW-U10-F HW-U10R-F (late break)
Dummy Block		HW-DB	

1. Dummy blocks (no contacts) are used with an odd number of contact blocks.
2. Combining HW-U10R-F and HW-U01R-F result in overlapping contacts (remain on, or closed, when switch is moved between two positions).

Lamp Circuit Components

Style	Application	Part Number
Long Lamp Holder	**Used with** Full-size Transformer and two contact blocks **Used with** Full Voltage Adaptor and two contact blocks	TW-LH2
Lead Holder	**Used with** TW-LH2 holder when using four contact blocks	HW-LH3

Full Voltage Modules

Style			Description	Part Number
Dummy Block with Full Voltage Adaptor		For use with odd number of contacts.	Finger-Safe	HW-DA1FBN
Full Voltage Adaptor		For use with even number of contacts.	Finger-Safe	TW-DA1FB

All Transformers step down to 6V (use 6V lamp).

Transformers

Style		Primary Voltage (50/60Hz)	Part Number
Transformers		120V AC	TW-F126B
		240V AC	TW-F246B
		480V AC	TW-F486B

6V secondary voltage.

② Lens Color Codes

Color	Code
Amber	A
Green	G
Red	R
Blue	S
White	W
Yellow	Y

Contact Arrangement Charts

How to Read Contact Arrangement Charts

To determine contact block mounting position, first make sure the selector switch is oriented as shown on the right

Contact Arrangement
Type and quantity of switch contacts

Circuit Number
* N/D = No designation

Contact Block Mounting Position
Position or mounting contact blocks on operator

Operator Position
Truth table indicates the operating position of contact block when operator is switched to that position.

X = On (Closed Contacts)
O = Off (Open Contacts)
X—X = Overlapping Contacts: Remain on (closed) when switch is moved between these two positions

Contact Block Part Number
Part number to use when ordering sub-assembly contact blocks, as required for use with corresponding mounting position

Contact Arrangement Chart: 2-Position Selector Switches

Style		Mounting Position	Operator Position		Contact Block Part Number	Description	Operator Part Number		
Contact	Circuit Number		L	R			Maintained	Spring Return from Right	Spring Return from Left
1NO	N/D	1	O	X	HW-U10-F	Knob/Lever Key Illuminated Knob	ASD0201T8 ASD0201KT8 ASLD0201T8	ASD0213T8 ASD0213KT8 ASLD0213T8	ASD0224T8 ASD0224KT8 ASLD0224T8
		2	O	O	HW-DB				
1NC	116	1	X	O	HW-U01-F	Knob/Lever Key Illuminated Knob	ASD0201T8 ASD0201KT8 ASLD0201T8	ASD0213T8 ASD0213KT8 ASLD0213T8	ASD0224T8 ASD0224KT8 ASLD0224T8
		2	O	O	HW-DB				
1NO 1NC	N/D	1	O	X	HW-U10-F	Knob/Lever Key Illuminated Knob	ASD0201T8 ASD0201KT8 ASLD0201T8	ASD0213T8 ASD0213KT8 ASLD0213T8	ASD0224T8 ASD0224KT8 ASLD0224T8
		2	X	O	HW-U01-F				
	103	1	X	O	HW-U01-F	Knob/Lever Key Illuminated Knob	ASD0201T8 ASD0201KT8 ASLD0201T8	ASD0213T8 ASD0213KT8 ASLD0213T8	ASD0224T8 ASD0224KT8 ASLD0224T8
		2	O	X	HW-U10-F				
1NO-EM 1NC-LB	600	1	O	X	HW-U10R-F	Knob/Lever Key Illuminated Knob	ASD0201T8 ASD0201KT8 ASLD0201T8	ASD0213T8 ASD0213KT8 ASLD0213T8	ASD0224T8 ASD0224KT8 ASLD0224T8
		2	X	O	HW-U01R-F				
	601	1	X	O	HW-U01R-F	Knob/Lever Key Illuminated Knob	ASD0201T8 ASD0201KT8 ASLD0201T8	ASD0213T8 ASD0213KT8 ASLD0213T8	ASD0224T8 ASD0224KT8 ASLD0224T8
		2	O	X	HW-U10R-F				
2NO	N/D	1	O	X	HW-U10-F	Knob/Lever Key Illuminated Knob	ASD0201T8 ASD0201KT8 ASLD0201T8	ASD0213T8 ASD0213KT8 ASLD0213T8	ASD0224T8 ASD0224KT8 ASLD0224T8
		2	O	X	HW-U10-F				
2NC	104	1	X	O	HW-U01-F	Knob/Lever Key Illuminated Knob	ASD0201T8 ASD0201KT8 ASLD0201T8	ASD0213T8 ASD0213KT8 ASLD0213T8	ASD0224T8 ASD0224KT8 ASLD0224T8
		2	X	O	HW-U01-F				
2NO 2NC	N/D	1	O	X	HW-U10-F	Knob/Lever Key Illuminated Knob	ASD0201T8 ASD0201KT8 ASLD0201T8	ASD0213T8 ASD0213KT8 ASLD0213T8	ASD0224T8 ASD0224KT8 ASLD0224T8
		2	X	O	HW-U01-F				
		3	O	X	HW-U10-F				
		4	X	O	HW-U01-F				
	110	1	X	O	HW-U01-F	Knob/Lever Key Illuminated Knob	ASD0201T8 ASD0201KT8 ASLD0201T8	ASD0213T8 ASD0213KT8 ASLD0213T8	ASD0224T8 ASD0224KT8 ASLD0224T8
		2	O	X	HW-U10-F				
		3	X	O	HW-U01-F				
		4	O	X	HW-U10-F				
	111	1	O	X	HW-U10-F	Knob/Lever Key Illuminated Knob	ASD0201T8 ASD0201KT8 ASLD0201T8	ASD0213T8 ASD0213KT8 ASLD0213T8	ASD0224T8 ASD0224KT8 ASLD0224T8
		2	O	X	HW-U10-F				
		3	X	O	HW-U01-F				
		4	X	O	HW-U01-F				
4NO	N/D	1	O	X	HW-U10-F	Knob/Lever Key Illuminated Knob	ASD0201T8 ASD0201KT8 ASLD0201T8	ASD0213T8 ASD0213KT8 ASLD0213T8	ASD0224T8 ASD0224KT8 ASLD0224T8
		2	O	X	HW-U10-F				
		3	O	X	HW-U10-F				
		4	O	X	HW-U10-F				

Contact Arrangement Chart: 3-Position Selector Switches

Style			Operator Position					Operator Part Number			
Contact	Circuit Number	Mounting Position	L	C	R	Contact Block Part Number	Description	Maintained	Spring Return from Right	Spring Return from Left	Two-Way
1NO 1NC	202	1	X	O	O	HW-U10-F	Knob/Lever Key Illuminated Knob	ASD0302T8 ASD0302KT8 ASLD0302T8	ASD0314T8 ASD0314KT8 ASLD0314T8	ASD0323T8 ASD0323KT8 ASLD0323T8	ASD0335T8 ASD0335KT8 ASLD0335T8
		2	X—X		O	HW-U01-F					
	203	1	O	X—X		HW-U01-F	Knob/Lever Key Illuminated Knob	ASD0302T8 ASD0302KT8 ASLD0302T8	ASD0314T8 ASD0314KT8 ASLD0314T8	ASD0323T8 ASD0323KT8 ASLD0323T8	ASD0335T8 ASD0335KT8 ASLD0335T8
		2	O	O	X	HW-U10-F					
	302	1	X	O	X	HW-U10-F	Knob/Lever Key Illuminated Knob	ASD0306T8 ASD0306KT8 ASLD0306T8	ASD0310T8 ASD0301KT8 ASLD310T8	ASD0328T8 ASD0328KT8 ASLD0328T8	ASD0339T8 ASD0339KT8 ASLD0339T8
		2	X—X		O	HW-U01-F					
	303	1	O	X	O	HW-U01-F	Knob/Lever Key Illuminated Knob	ASD0306T8 ASD0306KT8 ASLD0306T8	ASD0310T8 ASD0301KT8 ASLD310T8	ASD0328T8 ASD0328KT8 ASLD0323T8	ASD0339T8 ASD0339KT8 ASLD0339T8
		2	O	O	X	HW-U10-F					
2NO	N/D	1	X	O	O	HW-U10-F	Knob/Lever Key Illuminated Knob	ASD0302T8 ASD0302KT8 ASLD0302T8	ASD0314T8 ASD0314KT8 ASLD0314T8	ASD0323T8 ASD0323KT8 ASLD0323T8	ASD0335T8 ASD0335KT8 ASLD0335T8
		2	O	O	X	HW-U10-F					
	301	1	X	O	X	HW-U10-F	Knob/Lever Key Illuminated Knob	ASD0306T8 ASD0306KT8 ASLD0306T8	ASD0310T8 ASD0301KT8 ASLD310T8	ASD0328T8 ASD0328KT8 ASLD0328T8	ASD0339T8 ASD0339KT8 ASLD0339T8
		2	O	O	X	HW-U10-F					
2NC	304	1	O	X	O	HW-U01-F	Knob/Lever Key Illuminated Knob	ASD0306T8 ASD0306KT8 ASLD0306T8	ASD0310T8 ASD0301KT8 ASLD310T8	ASD0328T8 ASD0328KT8 ASLD0328T8	ASD0339T8 ASD0339KT8 ASLD0339T8
		2	X—X		O	HW-U01-F					
	N/D	1	O	X—X		HW-U01-F	Knob/Lever Key Illuminated Knob	ASD0302T8 ASD0302KT8 ASLD0302T8	ASD0314T8 ASD0314KT8 ASLD0314T8	ASD0323T8 ASD0323KT8 ASLD0323T8	ASD0335T8 ASD0335KT8 ASLD0335T8
		2	X—X		O	HW-U01-F					
2NO 2NC	N/D	1	X	O	O	HW-U10-F	Knob/Lever Key Illuminated Knob	ASD0302T8 ASD0302KT8 ASLD0302T8	ASD0314T8 ASD0314KT8 ASLD0314T8	ASD0323T8 ASD0323KT8 ASLD0323T8	ASD0335T8 ASD0335KT8 ASLD0335T8
		2	O	O	X	HW-U10-F					
		3	O	X—X		HW-U01-F					
		4	X—X		O	HW-U01-F					
	210	1	O	X—X		HW-U01-F	Knob/Lever Key Illuminated Knob	ASD0302T8 ASD0302KT8 ASLD0302T8	ASD0314T8 ASD0314KT8 ASLD0314T8	ASD0323T8 ASD0323KT8 ASLD0323T8	ASD0335T8 ASD0335KT8 ASLD0335T8
		2	O	O	X	HW-U10-F					
		3	O	X—X		HW-U01-F					
		4	O	O	X	HW-U10-F					
	308	1	X	O	X	HW-U10-F	Knob/Lever Key Illuminated Knob	ASD0306T8 ASD0306KT8 ASLD0306T8	ASD0310T8 ASD0301KT8 ASLD310T8	ASD0328T8 ASD0328KT8 ASLD0328T8	ASD0339T8 ASD0339KT8 ASLD0339T8
		2	X—X		O	HW-U01-F					
		3	X	O	X	HW-U10-F					
		4	X—X		O	HW-U01-F					
	309	1	X	O	X	HW-U10-F	Knob/Lever Key Illuminated Knob	ASD0306T8 ASD0306KT8 ASLD0306T8	ASD0310T8 ASD0301KT8 ASLD310T8	ASD0328T8 ASD0328KT8 ASLD0328T8	ASD0339T8 ASD0339KT8 ASLD0339T8
		2	X—X		O	HW-U01-F					
		3	O	X	O	HW-U01-F					
		4	O	O	X	HW-U10-F					
	310	1	O	X	O	HW-U01-F	Knob/Lever Key Illuminated Knob	ASD0306T8 ASD0306KT8 ASLD0306T8	ASD0310T8 ASD0301KT8 ASLD310T8	ASD0328T8 ASD0328KT8 ASLD0328T8	ASD0339T8 ASD0339KT8 ASLD0339T8
		2	O	O	X	HW-U10-F					
		3	O	X	O	HW-U01-F					
		4	O	O	X	HW-U10-F					

1. Each operator sub-assembly is available as an "02" and an "06" for 3-position selector switches. The internal cam of an "02" is different from that of an "06". This results in designated combinations of open and closed contacts in the various operator positions.
2. N/D = No circuit number designation required in assembled part number.
3. X = On (closed contacts) O = Off (open contacts). X—X Overlapping contacts remain on (closed) when switch is moved between these two positions.

Contact Arrangement Chart: 3-Position Selector Switches

Style		Mounting Position	Operator Position			Contact Block Part Number	Description	Operator Part Number			
Contact	Circuit Number		L	C	R			Maintained	Spring Return from Right	Spring Return from Left	Two-Way
4NO	N/D	1	X	O	O	HW-U10-F	Knob/Lever Key Illuminated Knob	ASD0302T8 ASD0302KT8 ASLD0302T8	ASD0314T8 ASD0314KT8 ASLD0314T8	ASD0323T8 ASD0323KT8 ASLD0323T8	ASD0335T8 ASD0335KT8 ASD0335T8
		2	O	O	X	HW-U10-F					
		3	X	O	O	HW-U10-F					
		4	O	O	X	HW-U10-F					
	305	1	X	O	X	HW-U10-F	Knob/Lever Key Illuminated Knob	ASD0306T8 ASD0306KT8 ASLD0306T8	ASD0310T8 ASD0301KT8 ASLD0310T8	ASD0328T8 ASD0328KT8 ASLD0328T8	ASD0339T8 ASD0339KT8 ASLD0339T8
		2	O	O	X	HW-U10-F					
		3	X	O	X	HW-U10-F					
		4	O	O	X	HW-U10-F					
4NC	N/D	1	O	X—X		HW-U01-F	Knob/Lever Key Illuminated Knob	ASD0302T8 ASD0302KT8 ASLD0302T8	ASD0314T8 ASD0314KT8 ASLD0314T8	ASD0323T8 ASD0323KT8 ASLD0323T8	ASD0335T8 ASD0335T8 ASD0335T8
		2	X—X		O	HW-U01-F					
		3	O	X—X		HW-U01-F					
		4	X—X		O	HW-U01-F					
	314	1	O	X	O	HW-U01-F	Knob/Lever Key Illuminated Knob	ASD0306T8 ASD0306KT8 ASLD0306T8	ASD0310T8 ASD0301KT8 ASLD0301T8	ASD0328T8 ASD0328KT8 ASLD0328T8	ASLD0339T8 ASD0339KT8 ASLD0339T8
		2	X—X		O	HW-U01-F					
		3	O	X	O	HW-U01-F					
		4	X—X		O	HW-U01-F					

1. Each operator sub-assembly is available as an "02" and an "06" for 3-position selector switches. The internal cam of an "02" is different from that of an "06". This results in designated combinations of open and closed contacts in the various operator positions.
2. N/D = No circuit number designation required in assembled part number.
3. X = On (closed contacts) O = Off (open contacts). X—X Overlapping contacts remain on (closed) when switch is moved between these two positions.

Operator Truth Tables

Use the following tables to build custom selector switches.

2 Position Selector Switches

	Contact	Mounting Position	Operator Position	
			Left	Right
ASLD0201T8	HW-U10-F (NO)	L	O	X
		R	O	X
	HW-U01-F (NC)	L	X	O
		R	X	O
	HW-U10R-F (NO-EM)	L	O	—X—
		R	O	—X—
	HW-U01R-F (NC-LB)	L	—X—	O
		R	—X—	O

3 Position Selector Switches

	Contact	Mounting Position	Operator Position		
			Left	Center	Right
ASD0302T8 ASLD0302T8 ASD0302KT8	HW-U10-F (NO)	L	X	O	O
		R	O	O	X
	HW-U01-F (NC)	L	O	X—X	
		R	X—X		O
	HW-U10R-F (NO-EM)	L	X—	O	O
		R	O	O	X
	HW-U10R-F (NC-LB)	L	O	—X—	X
		R	X—	—X—	O

	Contact	Mounting Position	Operator Position		
			Left	Center	Right
ASD0306T8 ASLD0306T8 ASD0306KT8	HW-U10-F (NO)	L	X	O	X
		R	O	O	X
	HW-U01-F (NC)	L	O	X	O
		R	X—X		O
	HW-U10R-F (NO-EM)	L	X—	O	—X
		R	O	O	X
	HW-U01R-F (NC-LB)	L	O	—X—	O
		R	X—	—X—	O

Accessories — TWND Series

Item	Appearance	Description/Usage		Part Number
Lamp Removal Tool		Rubber tool used to install or remove LED's		OR-55
Metal Bezel		Replacement locking ring/ bezel	Standard octagonal units (chrome-pl.).	OG-81
			Extended, non-illuminated (chrome-pl.).	OG-82
			Extended, illuminated (chrome-pl.).	OG-83L
			Jumbo Mushroom Shallow Shroud	ABN4G
			Jumbo Mushroom Deep Shroud	ABN4F
Plastic Bezel		Black plastic locking ring/bezel		OGP11B
Boot/Cover		Used to cover and protect pushbuttons	In place of ①, specify **Neoprene Rubber Boot** color: **B** (black), **G** (green), **R** (red), **Y** (yellow)	OC-11 ①
			Flush units (clear plastic -40° to +60°C).	OC-121
			Extended units (clear plastic -40° to +60°C).	OC-122
Anti-Rotation Ring		Plastic washer For nameplates or panels that should not be scratched.		OGL-D1T
		Thrust washer/Anti-rotation ring for use with notched panel cutout.		OGL-D1S
Mounting Hole Plug		Plugs used to fill unused 30mm panel cutouts.	Plastic with locking nut attached.	OBP-11
			Metal with locking nut attached	OB-11
			Grey rubber (-5° to +60°C)	OB-13
Terminal Tab Adaptor		Tab #250 17/64" x 3/64" (6.35mm x 0.8mm): Single tab		TW-FA4
Long Lamp Holder		**Used with** Transformer and two contact blocks **Used with** Full Voltage Adaptor and two contact blocks		TW-LH2
Lead Holder		**Used with** TW-LH2 holder when using four contact blocks		HW-LH3
Lock Out Adaptor		Used to provide lockout protection for TWTD pushbuttons and knob selectors. ø 1-13/64" (30mm)		OL-KL1
Full Voltage Clips		Primary Voltage (50/60Hz) Required for all full voltage pilot lights. Two pieces each. 2 clips required for full voltage pilot lights.		APD-F
Replacement Keys		Pair of keys (#0)		TW-SK

Accessories TWND Series continued

Item	Appearance	Description/Usage	Part Number	
			1NC	**1NO**
Contact Blocks (with side entry)		These contacts are applicable for wires terminated by ring, fork, terminals, **not recommended for bare wire connections**.	HW-U01 HW-U01-MAU HW-U01R HW-U01R-MAU (with side entry)	HW-U10 HW-U10-MAU HW-U10R HW-U10R-MAU (with side entry)
Contact Blocks (without side entry)		These contacts are applicable for wires terminated by ring, fork, or ferule terminals, and **also bare wire connections**.	HW-U01-F HW-U01-MAU-F HW-U01R-F HW-U01R-MAU-F (no side entry)	HW-U10-F HW-U10-MAU-F HW-U10R-F HW-U10R-MAU-F (no side entry)
Contact Block Rubber Boot		• For 1 layer (2 each) contact blocks. • Nitril rubber, black. • Used to prevent oil or dirt ingress into contact blocks. • Temperature range -5 to 60°. 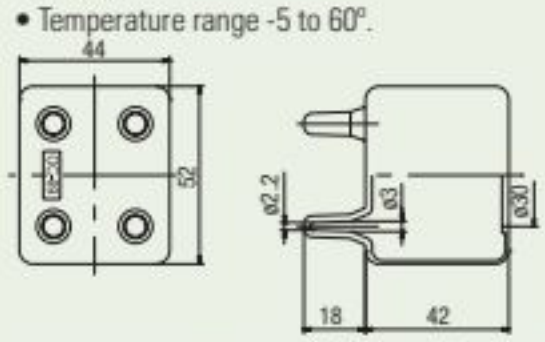 • Cut tube projection in the rubber cover to match the diameter of the wires.	OC-99	

Fingersafe Covers for TWND Series

Item	Description	Used with	Part Number
	Fingersafe terminal cover, for full voltage pilot lights, adds 3mm to overall depth	Full voltage pilot lights	APD-PVL
	Fingersafe terminal cover, adds 1.5mm to overall depth	Transformer pilot lights	N-VL3

Nameplates — TWND Series

Faceplates

	NALD	NAKD	NAQD
Dimensions	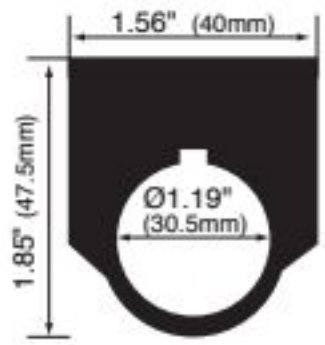	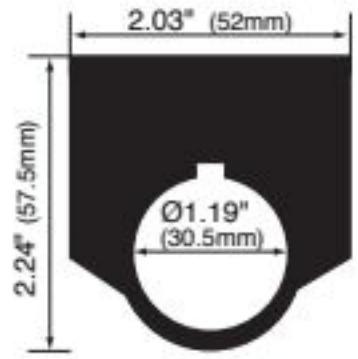	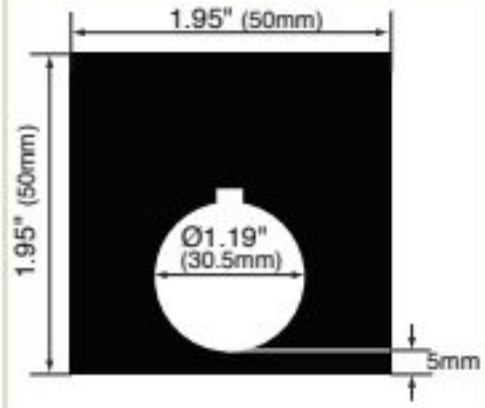
Description	Part Number		
Nameplate (blank)	NALD-B (black) NALD-R (red)	NAKD-B (black) NAKD-R (red)	NAQD-B (black) NAQD-R (red)
Nameplate (engraved)	NALD-①	NAKD-①	NAQD-①

1. Nameplates are made of 0.031" aluminum. Lettering is white letters engraved on black background.
2. In place of ①, insert either the standard legend code from table below or custom engraving delimited by " ".

Standard Legend Codes

Pushbuttons				Pushbuttons/Selector Switches				Selector Switches	
Legend	Code	Legend	Code	Legend	Code	Legend	Code	Legend	Code
AUTO	101	OPEN	116	AUTO-MAN	201	REV-FOR	216	AUTO-MAN-OFF	301
CLOSE	102	OUT	117	CLOSE-OPEN	202	RUN-JOG	217	AUTO-OFF-MAN	302
DOWN	103	RAISE	118	DOWN-UP	203	RUN-SAFE	218	CLOSE-OFF-OPEN	303
EMERG.STOP*	104	RESET	119	FAST-SLOW	204	SAFE-RUN	219	DOWN-OFF-SLOW	304
FAST	105	REVERSE	120	FOR-REV	205	SLOW-FAST	220	FAST-OFF-SLOW	305
FORWARD	106	RUN	121	HAND-AUTO	206	START-STOP	221	FOR-OFF-REV	306
HAND	107	SLOW	122	HIGH-LOW	207	STOP-START	222	LEFT-OFF-RIGHT	307
HIGH	108	START	123	JOG-RUN	208	UP-DOWN	223	LOWER-OFF-RAISE	308
IN	109	STOP*	124	LEFT-RIGHT	209			OFF-MAN-AUTO	309
INCH	110	STOP	125	LOWER-RAISE	210			OFF-SLOW-FAST	310
JOG	111	TEST	126	MAN-AUTO	211			OFF-1-2	311
LOW	112	UP	127	OFF-ON	212			OPEN-OFF-CLOSE	312
LOWER	113	I (Int'l On)	150	ON-OFF	213			SLOW-OFF-FAST	313
OFF	114	O (Int'l Off)	151	OPEN-CLOSE	214			SUMMER-OFF-WINTER	314
ON	115	EMO	152	RAISE-LOWER	215			UP-OFF-DOWN	315
								1-OFF-2	316
								HAND-OFF-AUTO	317

1. *Available in Red as standard legend code 104 and 124. To order engraved nameplate and codes, add legend code to nameplate part number. Character height based on the number of characters, space and size of nameplate. Standard character size is 3/16".
2. Nameplates with standard legends are the same list price as blank nameplates. Special engravings, additional cost.

To specify engraving instructions, use the Nameplate order form on next page.

Custom engraved Nameplates Order Form — TWND Series

Copy this order form and use it to specify Letter Height, Custom Engravings, Location of Engraving on Nameplate, and Quantity Desired.
To ensure engraving accuracy, fax it to your IDEC representative. or Distributor.

Your Company Name: _____ IDEC Rep/Distributor Contact: _____

Your Name: _____ PO number (if known): _____

Telephone: _____ IDEC Rep/Distributor Phone: _____

Fax & Email: _____ IDEC Rep/Distributor Fax & Email: _____

NALD Nameplate

Step 1.
Choose Letter Size - 7/64" or 1/8".

Check the box for the letter size you want. Then write your lettering in box below checkboxes. Note: 1/8" size letters cannot exceed 13 characters.

Step 2.
Specify Quantity.

Enter the number of nameplates desired in the box on the right.

Qty

Sample Letter Sizes
7/64" Letters: A B C D
1/8" Letters: A B C D

7/64" Letter Size ☐ 16 characters max (for 7/64" size letters)

1/8" Letter Size ☐ 13 characters max (for 1/8" size letters)

1 2 3 4 5 6 7 8 9 10 11 12 13 14 15 16

NAKD Nameplate

Step 1.
Choose Letter Size - 7/64" or 1/8".

Check the box for the letter size you want. Then write your lettering in box below checkboxes. Note: 1/8" size letters cannot exceed 9 characters.

Step 2.
Specify Quantity.

Enter the number of nameplates desired in the box on the right.

Qty

1 2 3 4 5 6 7 8 9 10 11 12 13 14 15 16 17

Sample Letter Sizes
1/8" Letters: A B C D

NAQD Nameplate

Step 1.
Choose Letter Size - 7/64" or 1/8".

Check the box for the letter size you want. Then write your lettering in box below checkboxes.
Note: 1/8" size letters cannot exceed 16 characters.

7/64" Letter Size ☐ 20 characters max (for 7/64" size letters)

1/8" Letter Size ☐ 16 characters max (for 1/8" size letters)

1 2 3 4 5 6 7 8 9 10 11 12 13 14 15 16 17 18 19 20

Step 2.
Specify Quantity.

Enter the number of nameplates desired in the box on the right.

Qty

Sample Letter Sizes
3/32" Letters: A B C D
1/8" Letters: A B C D

Switch Engraving Order Form – TWND Series

Copy this order form and use it to specify Letter Height, Maximum Number of Lines and Text to be engraved.

To insure engraving accuracy, fax it to your IDEC representative or Distributor.

Your Company: _____ Telephone: _____

Name: _____ Fax: _____

Address: _____ Email: _____

PO: _____ Part Number to be Engraved: _____

Please check one of the boxes below to indicate your choice of engraving options:

Square Switch

	# of Lines	Letter Height	Max. Characters Per Line
☐	1	5/32	7
☐		1/8	8
☐	2	5/32	7
☐		1/8	8
☐	3	1/8	8
☐	4	Custom*	

*Engraving is possible, but character size will be smaller than standard sizes.

65mm Jumbo Mushroom

	# of Lines	Letter Height	Max. Characters Per Line
☐	1	3/4	4
☐		5/16	5
☐	2	5/16	5
☐		1/4	6
☐		5/32	8
☐	3	5/32	8
☐		1/8	9
☐	4	1/8	9

ø29mm, ø40mm Mushroom Head

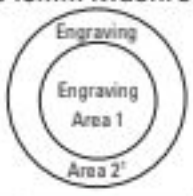

		# of Lines	Letter Height	Max. Characters Per Line
☐	Engraving Area 1	1	5/32	5
☐			1/8	5
☐	Engraving Area 2	1	5/32	7
☐			1/8	7

1. Above mentioned specifications hold true for standard size push-buttons (round and square).
2. [1]Engraving Area 2 can be engraved for 40mm mushroom head non-Illuminated pushbutton only.
3. Engraving is done on the button itself for non-Illuminated push buttons and on marking plate for illuminated push buttons and pilot lights.
4. Please enter text exactly how you want it engraved, take care to emphasize capital or small letters.

Round Switch

	# of Lines	Letter Height	Max. Characters Per Line
☐	1	5/32	7
☐		1/8	8
☐	2	5/32	7
☐		1/8	8
☐	3	1/8	8
☐	4	Custom*	

*Engraving is possible, but character size will be smaller than standard sizes.

Enter text to be engraved:

Line 1: _____

Line 2: _____

Line 3: _____

Line 4: _____

Sample Letter Sizes

1/8 Letters: OPEN

5/32 Letters: OPEN

All engraving is 5/8mm wide.

For IDEC Internal Use Only:

Work Order #: _____

Dimensions (mm)

Pushbutton

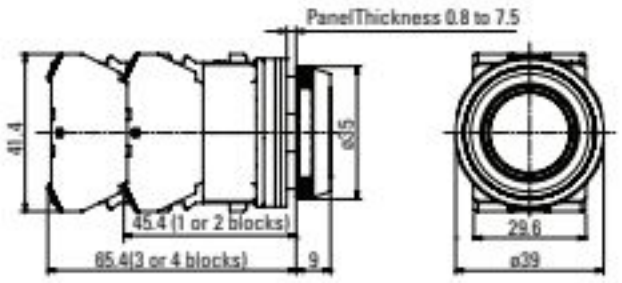

Pushbuttons	Dimension A	Dimension B
Flush Extended Extended w/Full Shroud	0.351" (9mm) 0.566" (14.5mm) 0.663" (17mm)	ø 0.975" (25mm) ø 0.975"(25mm) ø 1.11" (28.5mm)
Mushroom Mushroom w/Full Shroud Jumbo Mushroom ø 1.56" (40mm)	0.858" (22mm) 0.936" (24mm) 1.13" (29mm)	ø 1.56" (40mm) ø 1.87" (48mm) ø 2.54" (65mm)
Mushroom, Pushlock Turn Reset and Push-Pull ø 1.56" (40mm)	*0.975" (25mm) **0.975" (25mm)	ø 1.56" (40mm) ø 1.56" (40mm)

*Dimension when operator is in reset position.
**Dimension when operator is in pull position.

Mushroom Pushbutton w/Full Shroud

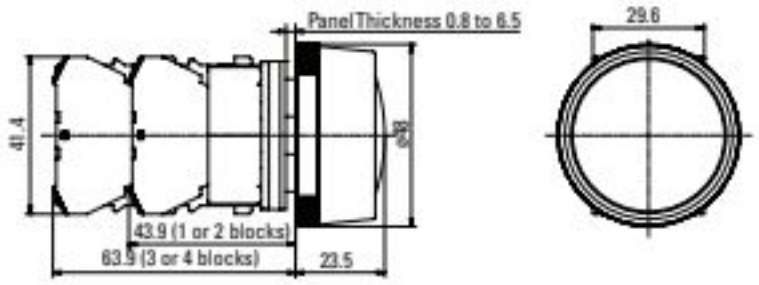

Illuminated Pushbuttons

w/Transformer

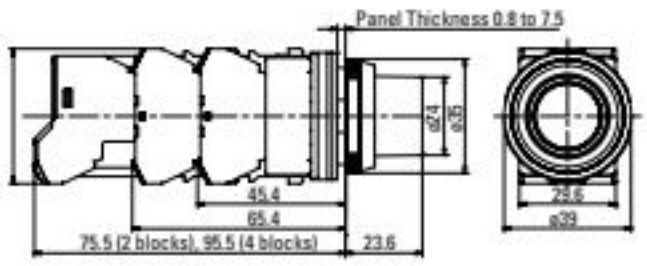

Full Voltage

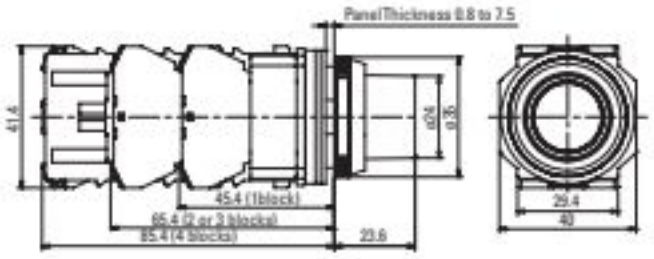

Illuminated Pushbuttons	Dimension A	Dimension B
Flush w/Full Shroud	0.975" (25mm) 0.995" (25.5mm)	ø 0.936" (24mm) ø 0.936" (24mm)
Extended w/Full Shroud	0.741" (19mm) 0.761" (19.5mm)	ø 0.936" (24mm) ø 0.936" (24mm)
ø 1.56" (40mm) Mushroom Pushlock Turn Reset, Push-Pull	*0.975" (25mm) **0.975" (25mm)	ø 1.56" (40mm) ø 1.56" (40mm)

*Dimension when operator is in reset position.
**Dimension when operator is in pull position.

Pilot Lights

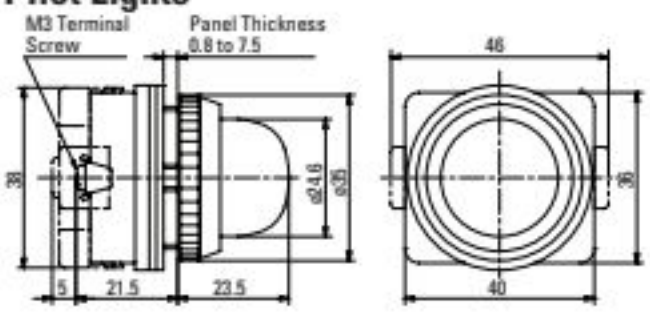

Selector Switches

Knob

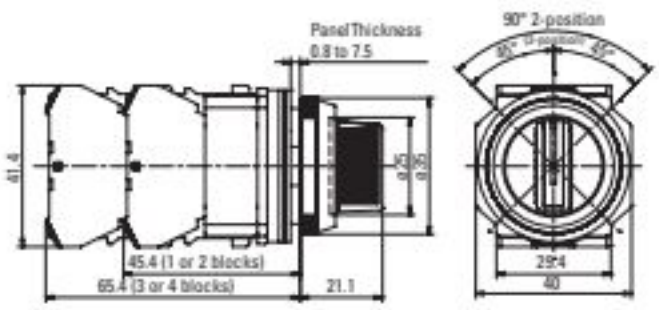

Lever

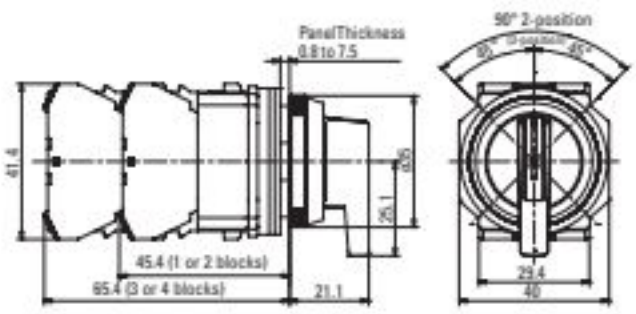

Key

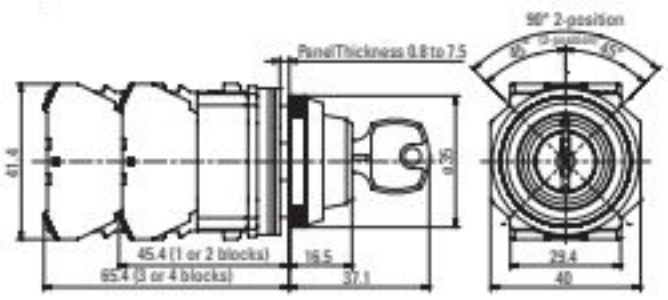

Illuminated Knob

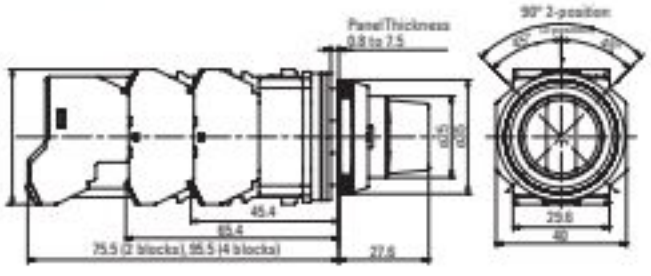

Selector Switches Panel Cut-Out

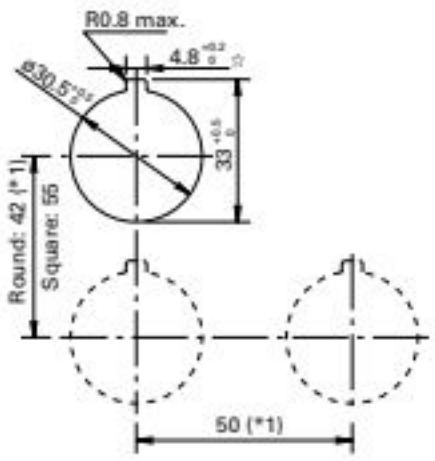

1. *Jumbo Mushroom < 2.61" (66mm)
2. Minimum mounting centers are applicable to switches with one stack of contact blocks. When mounting two stacks of contact blocks, minimum centers should allow for access to wiring.
3. The ø 0.195" (ø 5mm) recess is necessary when either the nameplate or anti-rotation ring is used.

IlluminatedSelector Switches

OL-KL1
Lock-Out Adaptor

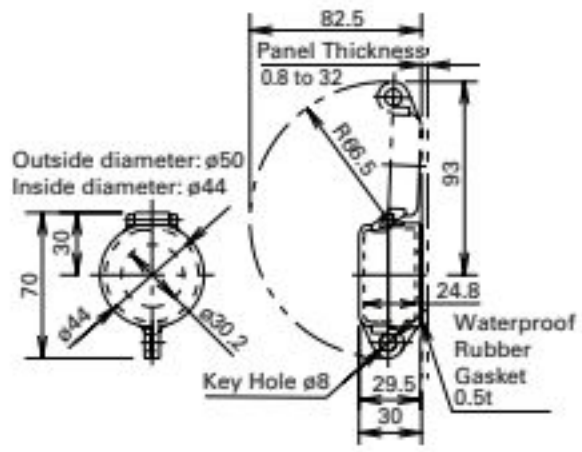

OC-31
Pushbutton Clear Boot

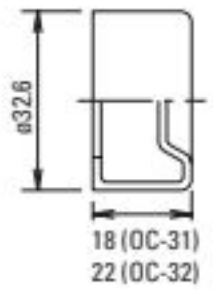

OGL-11
Anti-Rotation Ring

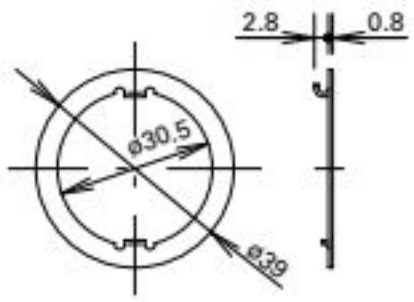

OB-31
Mounting Hole Rubber Plug

Finger-Safe Cover

N-VL3

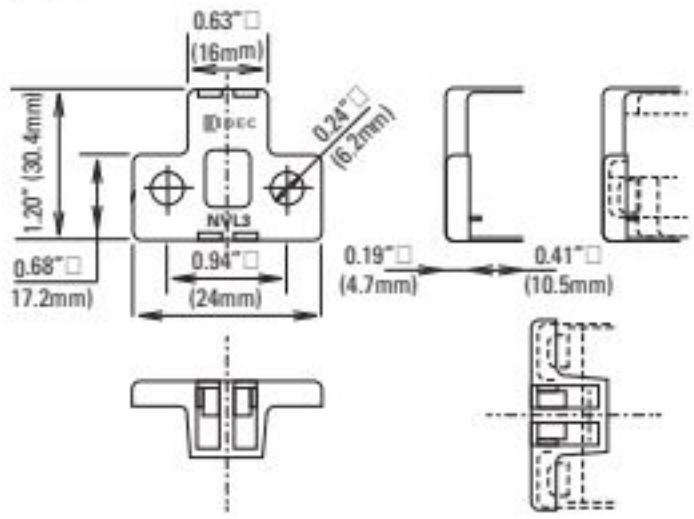

APD-PVL

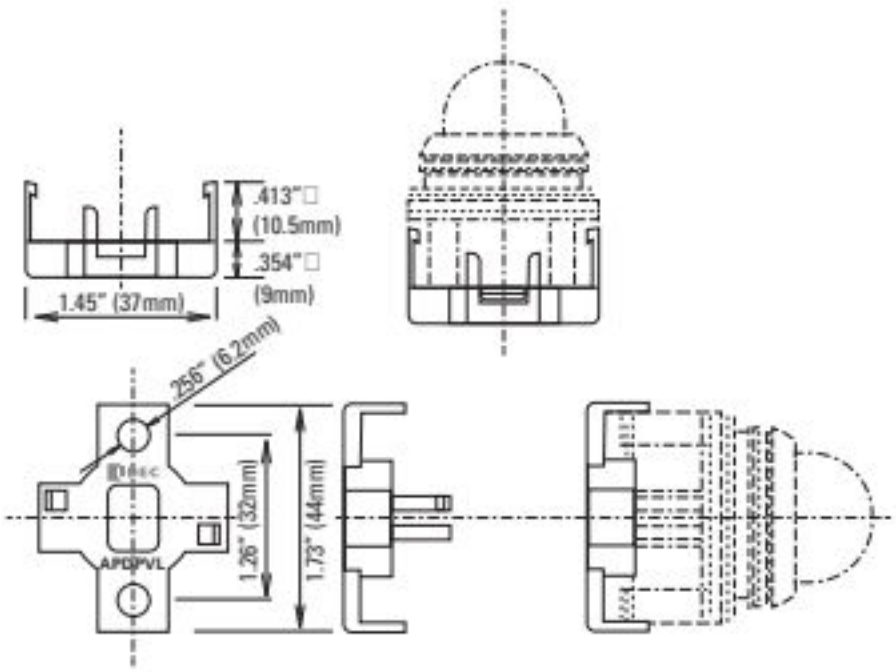

Operating Instructions

Adjustment for Panel Thickness

Each unit is shipped with several waterproof gaskets which are 0.06" (1.5mm) and 0.12" (3mm) thick. Combine the gaskets for a dimension approximately equal to panel thickness and install between the bezel and the body of the unit.

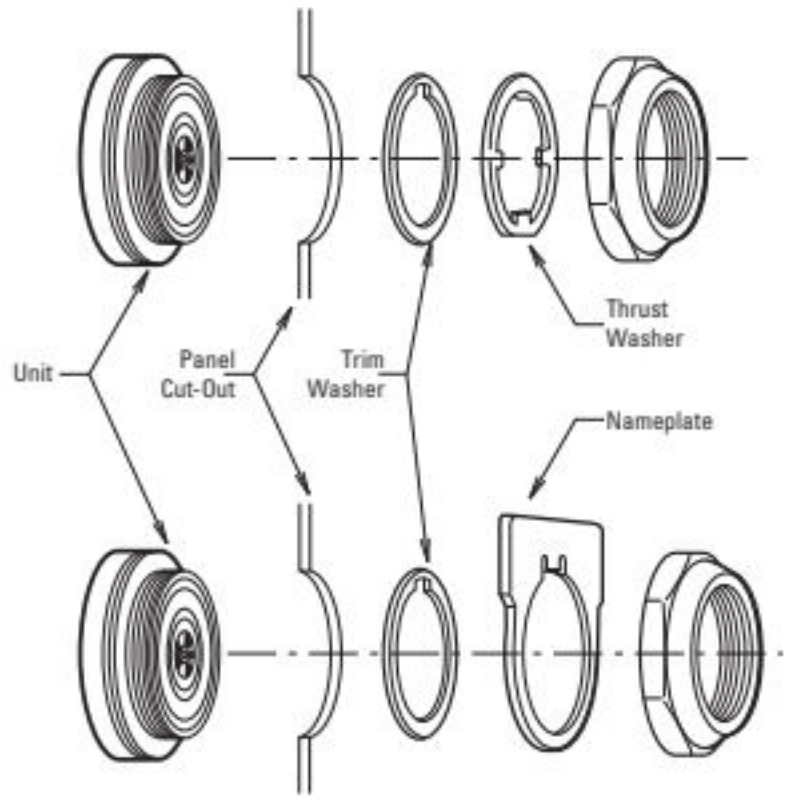

A trim washer must be used with a thrust washer or a nameplate to prevent the control unit from rotating in the mounting hole. When using anti-rotation rings (trim washer with thrust washer or nameplate), install as shown below.

Selector Switches

The operator shaft of each unit has a recess to identify in which direction to install the handle. Align the handle with the recess. Press color insert (TW-HC1) into the Standard Operating Positions.

Standard Operation Positions

2-Position, 90°	3-Position, 45°
1 2	0 1 2

Non-Illuminated 3-Position Operators

0 1 2	1 0 2	1 0 2

Insallation of LED Illuminated Units

Transformer units are recommended for use in areas subjected to inductive noise.

Application Example For Push-To-Test Pilot Light

A typical application of illuminated pushbuttons is a push-to-test pilot light which can be used to check the lamp/LED circuit.

Transformer/AC-Adapter Circuit

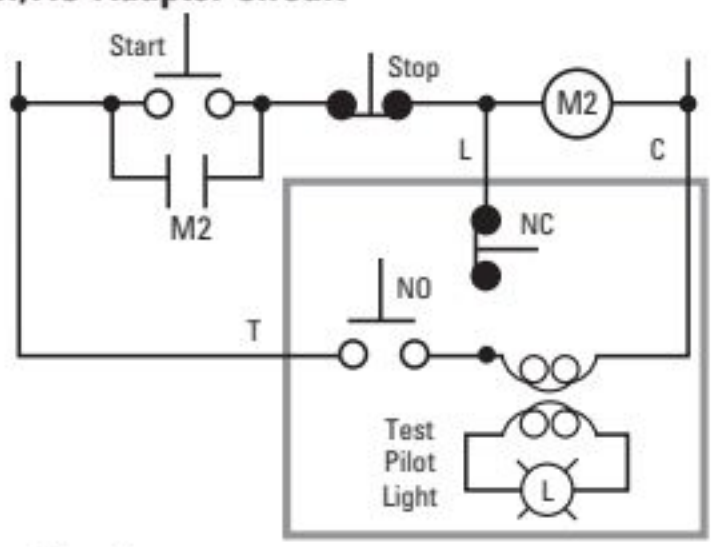
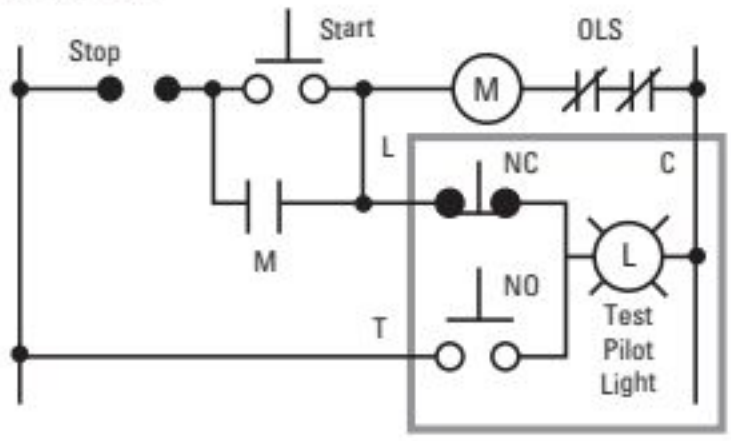
Full Voltage Circuit